ROBOTIC

WELDING TORCHES

CATALOG

EDR torches®
Evolution Design Robotics

ROBOTIC
WELDING TORCHES

"EDRtorches is the result of a long engineering work developing products for robotic welding system"

When we gather in a company more than 25 years of experience in designing applications and solutions in welding, with a high level engineering team only something good can arise, EDRtorches is the result of a long engineering work developing products for wel-ding systems robotic, automated and manual.

Our spirit of continuous innovation is evident in the entire product line we manufacture, we believe that we must see beyond what the industry needs and anticipate solutions to future challenges.

With the product ranges endorsed by companies worldwide, we ensure the most appropriate solution to your demand, in addition to a high level of advice.

EDRtorches we have the solution and the product you need.

"We understand that the development of a product starts at the design stage but just as important are quality and production"

Companies with technological or industrial character know the importance of innovating to continue in the current market. In EDR torches this becomes a work philosophy, we understand that without innovation it is not possible to advance in such a competitive world where companies and professionals need increasingly com-plex solutions.

EDR torches has a strong R & D department dedicated to the deve-lopment of new welding applications, providing customized solutions both in the area of robotic welding and manual.

We understand that the development of a product begins at the design stage but just as important are the quality and production designed and tested.

The long experience of EDR torches in all sectors related to welding makes us capable of providing the best solutions to your manufactu-ring challenges, tell us what you need and we will make it possible.

BOT SYSTEM

COLDTip

Exclusive system for cooling contact tips, reduces heating of the contact tip by 50%,extending the tip duration up to 4 times.

EASYCleaning

Comprehensive cleaning mechanism for welding projections, developed for the automotive industry where the projections are very high, this system eliminates the projections of the interior of the nozzle completely in each cleaning cycle. Recommended in applications where the level of projections is very high.

FOURPower

The 4 power conductors designed for high levels of torsion and high resistance to fatigue, provide that the torch system never stops working by the breakage of one or several cables, in addition to multiply by two the section of the cooling flow.

CEROFit

The high precision machining performed in the same manufacturing phase, the anti-collision adjustment systems are manufactured in the same machining sequence with maximum precision.

Depending on the type of robot to be used, we must select a system that adapts to the robot, for this there are two systems available for the two types of robots that exist on the market.

Hollow shaft systems where we will adapt the iBOT or external wiring system where we will adapt the eBOT. Both systems have the advances described above.

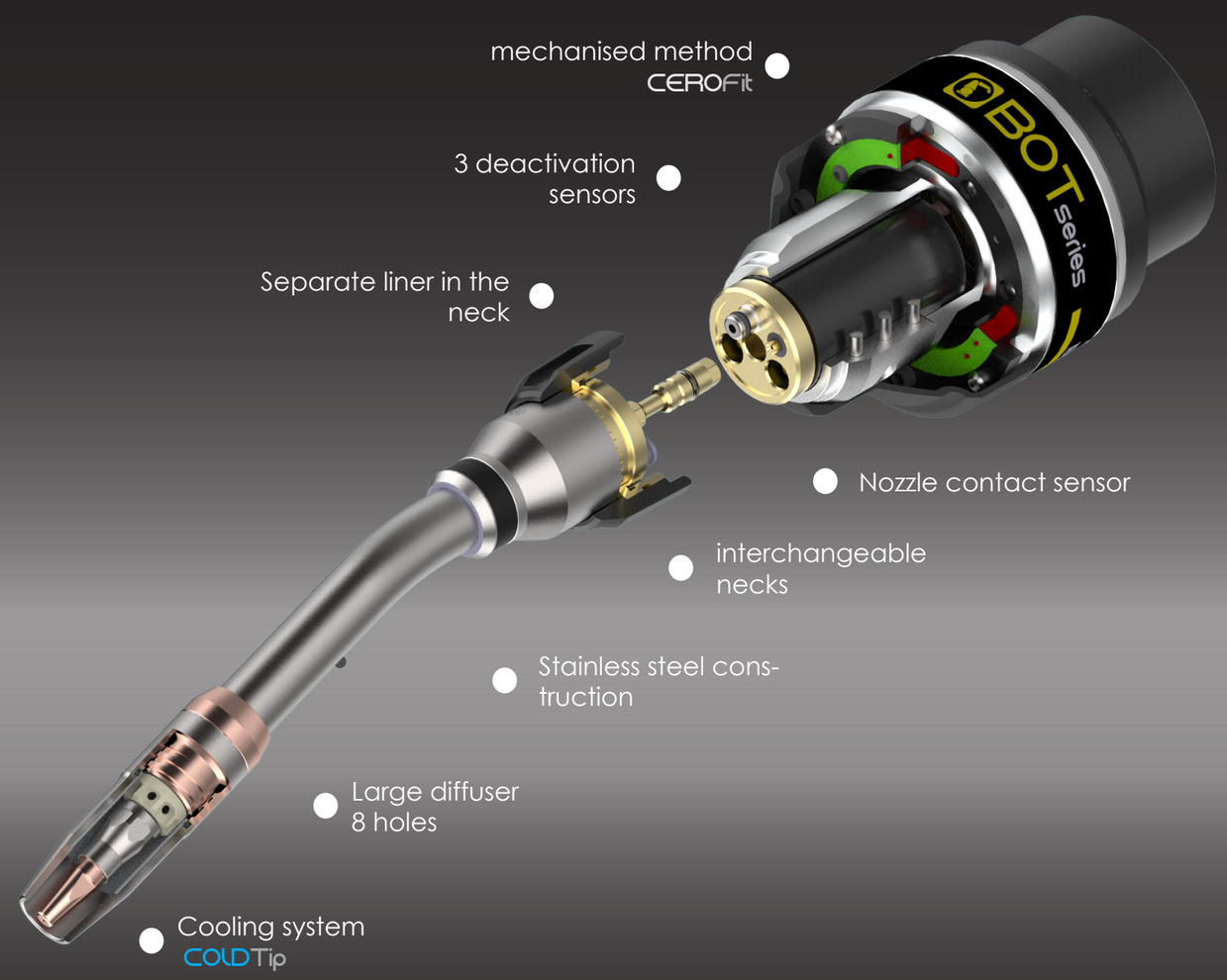

INDEX

Advantages of BOT systems 8 Pag.

Selection guides BOT installations

Installation codes MIG-MAG BOT- GAS COOLING 20 Pag.

Installation codes MIG-MAG BOT- LIQUID COO- 22 Pag.

Installation codes TIG BOT- LIQUID COOLING 24 Pag.

1 **Robotic welding necks**

MIG / MAG BOT-30G (300A) 28 Pag.

MIG / MAG BOT-31EC (350A) 30 Pag.

MIG / MAG BOT-32W (350A) 32 Pag.

MIG / MAG BOT-41EC (400A) 34 Pag.

MIG / MAG BOT-40W (500A) 36 Pag.

MIG / MAG BOT-50W (550A) 38 Pag.

MIG / MAG BOT-60W (600A) 40 Pag.

TIG-BOT-T5W (400A) 42 Pag.

2 **Robotic power cable**

iBOT HW 44 Pag.

eBOT external axis 45 Pag.

3 **Anti-collision systems**

iBOT 48 Pag.

eBOT 49 Pag.

4 **Discs of adaptation to robots** 50 Pag.

6 **Cleaning station CS2** 52 Pag.

7 **TCP control necks BOT** 54 Pag.

8 **Protective liquids** 55 Pag.

Data base 56 Pag.

iBOT

Robotic welding torches for hollow wrist robots

eBOT

Robotic welding torches for standar robots

etBOT

Robotic welding torches for standar robots TIG

1 Welding necks MIG-MAG
LIQUID COOLING

Structure of the neck in stainless steel, gives a rigidity and stability of the TCP much higher than the termination in Brass more unstable with changes in temperature.

Interchangeable necks. Total compatibility and wide range of torch. Threaded neck change system, quick and easy with independent circuits and automatic liquid shutoff valves.

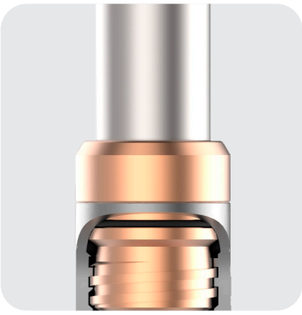

No gas leaks. O-ring retention, high temperature seal that prevents the nozzle from loosening and eliminates any loss of gas that occurs in the threads.

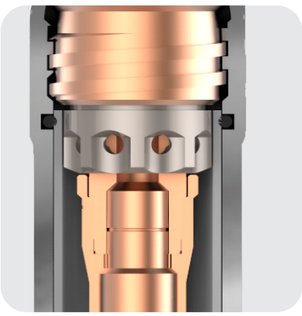

8-hole diffusers. The distribution of the 8 holes of the diffuser generates a better distribution of the shielding gas and a better cooling of the nozzle.

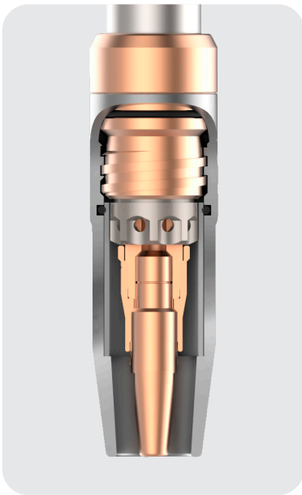

COLDTip

Necks 40W, 50W and 60W with cooling system. Long duration tip system COLDTip, exclusive of the BOT torch line, with this system the use of standard system contact tips is reduced from 3 to 5 times. How is it achieved. The system maintains the tip of contact at low temperature which makes the hardness of copper is not affected and wear less with the passage of the thread, in addition to stay cold the projections do not stick. Half of the contact tip enters a cooling chamber, The cone of the tip gives electrical and thermal transmission efficiency.

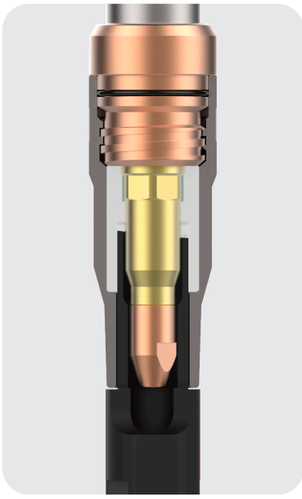

EASYCleaning

Necks 41EC and 31EC with integral cleaning. System that achieves the total elimination of projections, this is especially useful in welding galvanized steels used in the automotive industry where Zinc generates large projections that make cleaning difficult and produce multiple breakdowns.

Double Cooling

Separate ducts for the entire BOT line. Double circuit cooling system for nozzle and contact tip completely Independent. Gas driving totally separates from the rest of circuits like the thread of contribution, improving the stability of the gas outlet and the projection.

1 Welding necks MIG-MAG
GAS COOLING

Interchangeable neck wire rope, improves thread stability at the contact tip by eliminating wire rope

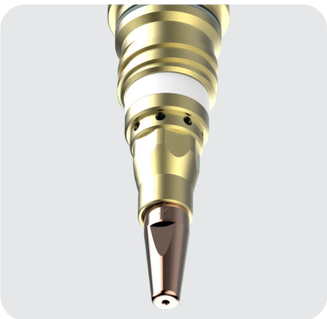

Metal gas diffuser with 8 gas outlet holes, improves welding protection.

M10 contact tips with long length and high resistance BICOMP materials, triple the life of a standard tip.

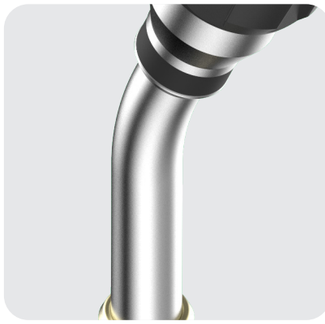

Stainless steel exterior structure, greater strength and stability of TCP.

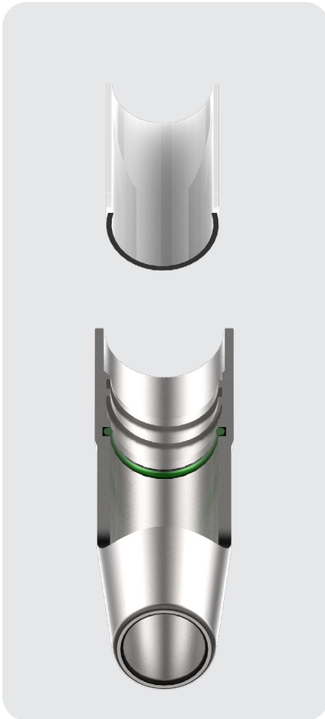

Interchangeable nozzle insulator, prolongs nozzle life.

1 Welding necks TIG

The TIG welding system for BOT systems can be used with or without thread supply, it is liquid cooled and its cooling power allows high working cycles maintaining the stability of tungsten.

More arch stability.
Integrated metal ring improves HF stability.

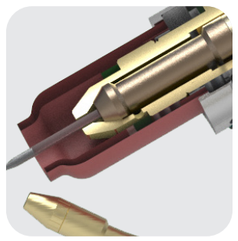

Longer lifeline.
Tungsten holders of large dimensions and high durability.

Protection options.
Connector for anti-collision system (not for cobots)

Better cooling.
Powerful cooling circuit up to the diffuser

2 Power cable MIG / MAG

BOT torch cables are designed with special materials that withstand high mechanical stresses and strong dynamic movements, thus avoiding breakage of their components due to fatigue. The torch cable assembly is quick and easy to change without the need for special tools.

Wire Brake option. Integrated wire-locking systems for the entire iBOT and eBOT range.

Nozzle sensor. Sensor (optional), allows contact detection with the nozzle for multiple applications.

Liquid loss blockage. Valves of automatic closing of the cooling circuit, allows to make a quick change of neck without loss of liquid and without the need to stop the cooling group.

FOURPower

Rotation up to 720°. Four special power cables FOURPower (liquid cooling system), allow a duration and an extra cooling capacity, in addition the materials of the power cables are prepared to rotate 360 in both directions which gives a freedom of 720° turn of the largest for these systems.

3 Anti-collision system

The BOT anti-collision sensor is intended for the deactivation of the robot in case of accidental collision of the welding gun.

This sensor consists of a Rocker system that detects the collision in any direction of movement, returning to its initial position when the obstacle that caused the collision disappears.

The resistance of the sensor is prepared to protect the torch system at low speed, at high speeds total protection is not guaranteed.

Advantages of eBOT anti-collision

~They are compatible with all standard industrial wrist robots
~Total protection of internal screws and sensors with IP64, prevents the accumulation of projections
~6 internal support points avoids zones of lower flexural strength improving the failure alarms due to inertias, this allows to increase the speed of movement of the robot
~ Manufactured in tempered steel and aeronautical aluminum 7075
~Different levels of hardness to adapt to all

3.1

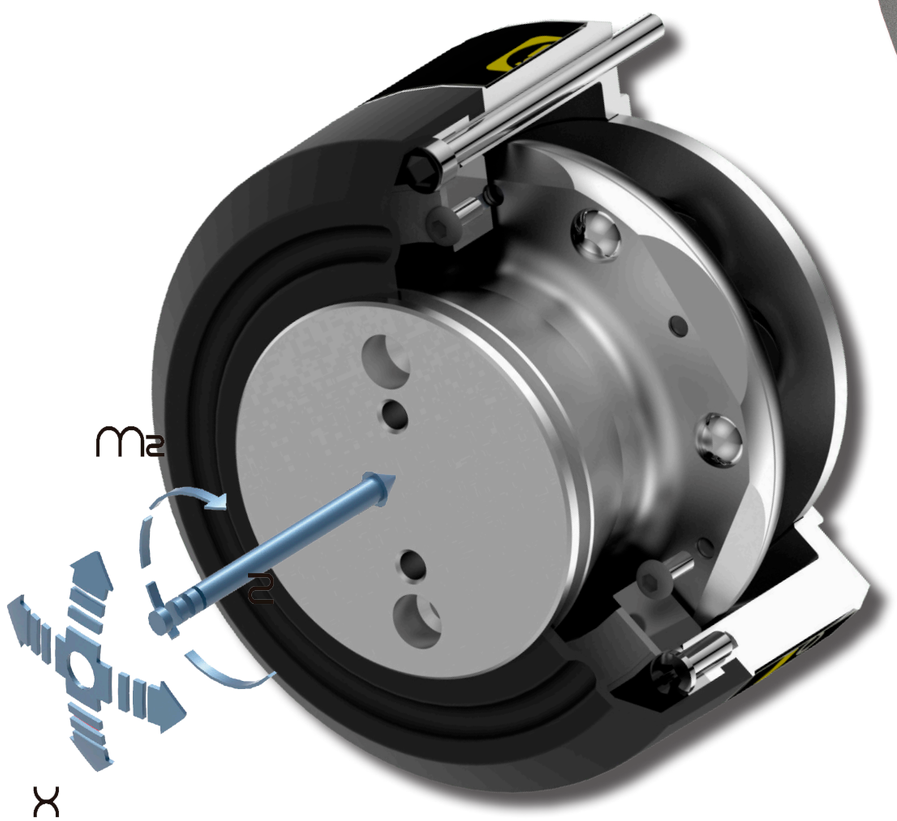

4 Adapter disc

The entire range of adaptation discs for fastening BOT welding systems to industrial robots, from conventional systems with closed disc to hollow shaft systems with opendiscs.

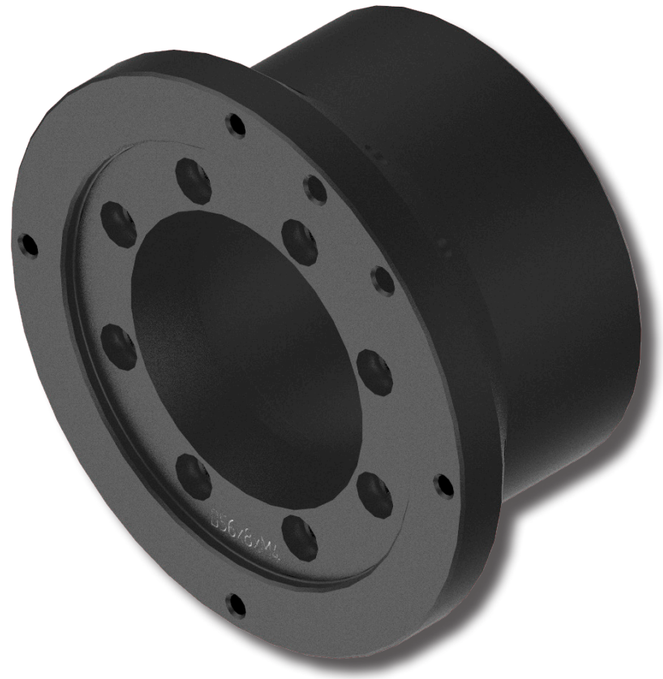

Welding systems for industrial robots BOTseries designed to last Advantages BOT adapter discs

~Precise adjustment for any industrial robot
~Two manufacturing options in 7075 aeronautical aluminum or insulating materials
~Possibility of manufacturing for robots of large non-specific welding dimensions, requesting prior study
~Guide with pins that guarantee a correct position of the disc

Fume extraction

The ASMIG system guarantees the maximum extraction of welding fumes in BOT systems, being this system modular and can be incorporated as an accessory in an already operating installation.

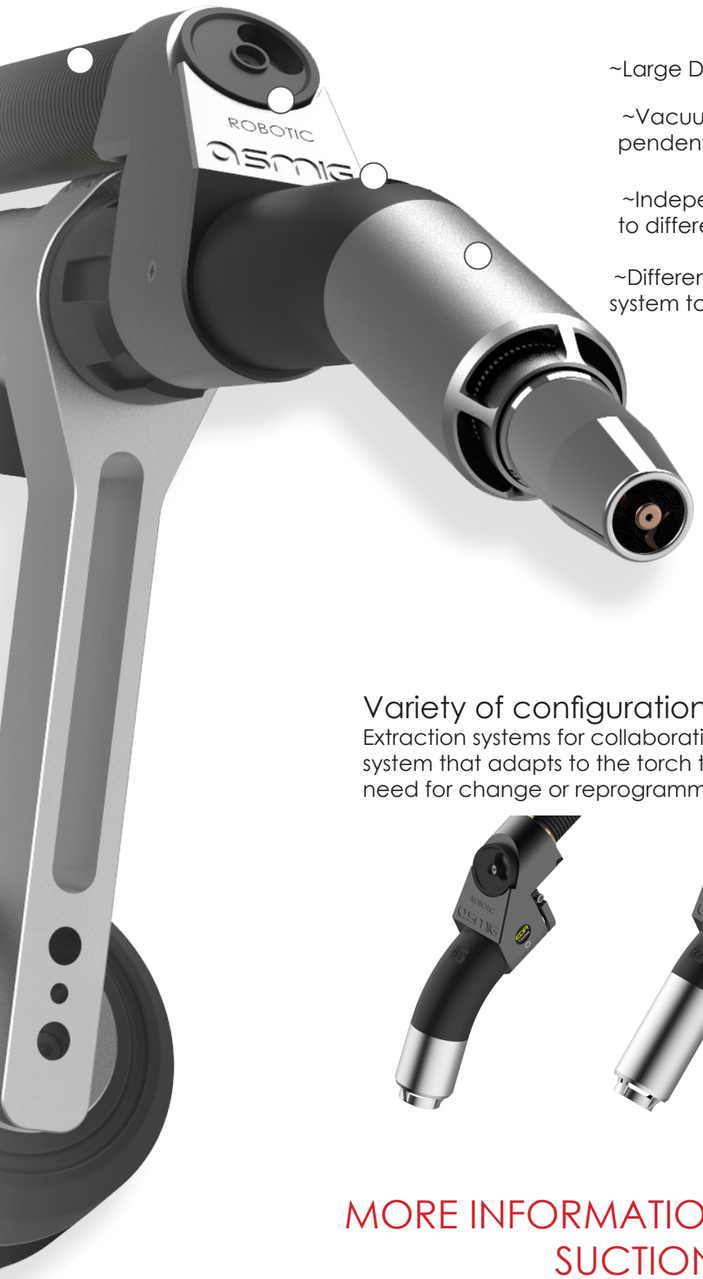

~Large Diameter Pipe With Lower Suction Losses

~Vacuum Regulation System External To The Pump. Independent Adjustment Of Each Torch In Centralized Systems

~Independent elbow. allow the systems to be adapted to different types of standard necks of the bot series

~Different sizes and lengths of suction nozzles. adjust your system to the best conditions

PATENT PENDING

Variety of configurations without losing programming.

Extraction systems for collaborative and industrial robots, ASMIG is a modular system that adapts to the torch that you currently have installed without the need for change or reprogramming in BOT series systems

MORE INFORMATION CONSULT THE ASMIG SUCTION CATALOG

6

Cleaning station CS2

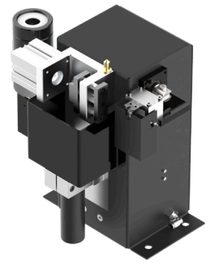

Nozzle cleaning station for automated and robotized welding torches. It incorporates welding wire cutting unit. Guarantees continuity of the welding process, keeping the nozzle of the welding torch free of slag and projections

7

TCP control neck BOT

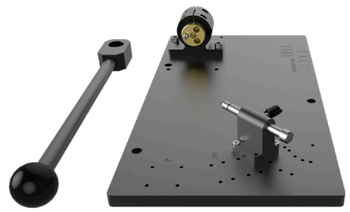

Calibration chart for MIG / MAG welding necks of the BOT series, allows for precise adjustment and calibration of the robotic necks, can for readjusting the neck after a blow or to verify its status after intensive use

8

Protective liquids

The liquids used for both the cleaning of the projections and the cooling of the torch must be of the highest quality to guarantee maximum durability.

Fume extraction

@SMIG

INSTALLATION CONFIGURATOR

1	2	3	4

S1 — S2 — 1 — 2 — 3 — 4

BOT-30G 300A

T1	R10.0011	L76xD15.5
T2	R10.0012	L76xD13
T3	R10.0211	L79xD15.5

BICOMP

P10	R10.0400.10	M10 1.0
P12	R10.0400.12	M10 1.2

3000	R12.0000	BOT-30G-180°
3022	R12.0220	BOT-30G-22°
3045	R12.0450	BOT-30G-45°

iBOT

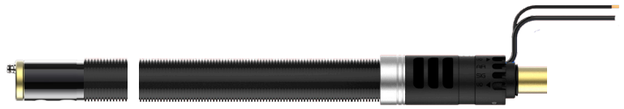

IEXXXG	R94.1XXX	power cable	gas Euro
IMXXXG	R94.2XXX	power cable	gas Miller
IPXXXG	R94.3XXX	power cable	gas Panasonic
IOXXXG	R94.4XXX	power cable	gas OTC

IB	R51.0001	Anticolision

5660	R71.0010	D56x6
5860	R71.0040L	D58x6
6611	R71.0050	D66x11
5680	R71.0060L	D56x8
6480	R71.0061L	D64X8
8060	R71.0070	D80x6

e-BOT

EEXXXG	R91.1XXX	power cable	gas Euro
EMXXXG	R91.2XXX	power cable	gas Miller
EPXXXG	R91.3XXX	power cable	gas Panasonic
EOXXXG	R91.4XXX	power cable	gas OTC

3.1

EB	R53.0001	anticolision
90	R41.1000	Bracket 90°
67	R41.1023	Bracket 67°

4040	R73.0010	D40x4
5040	R73.0020	D50x4

K1	R04.0000	Neck tool BOT

S1 + S2 + 1 + 2 + 3 + 4 + ■

Sample installation code: T1-P12-3022-IE137G-XX-IB-5860-K1

BOT series MIG/MAG LIQUID COOLING

S1 | S2 | 1 | 2 | 3 | 4

BOT-31EC 350A

T1	R10.0301	L47xD13.5

P10	R10.0200.08	M6	0.8
P12	R10.0200.10	M6	1.0
P16	R10.0200.12	M6	1.2

3100	R13.1000	BOT-31W-180°	
3122	R13.1220	BOT-31W-22°	
3136	R13.1360	BOT-31W-36°	
3145	R13.1450	BOT-31W-45°	
314L	R13.0451	BOT-31W-45°L	

BOT-32W 350A

T1	R10.2311	L47xD13.5

P10	R10.0200.08	M6	0.8
P12	R10.0200.10	M6	1.0
P16	R10.0200.12	M6	1.2

3200	R13.2000	BOT-31W-180°	
3222	R13.2220	BOT-31W-22°	
3236	R13.2360	BOT-31W-36°	
3245	R13.2450	BOT-31W-45°	
324L	R13.2451	BOT-31W-45°L	

BOT-41EC 400A

T1	R10.0021	L76xD15.5

BICOMP

P10	R10.0300.10	M8	1.0
P12	R10.0300.12	M8	1.2

4100	R14.1000	BOT-41EC-180°	
412F	R14.1220	BOT-41EC-22°F	
412L	R14.1221	BOT-41EC-22°L	
4036	R14.1360	BOT-41EC-36°	
4045	R14.1450	BOT-41EC-45°	

BOT-40W 500A

T1	R10.0011	L76xD15.5
T2	R10.0012	L76xD13
T3	R10.0211	L79xD15.5

BICOMP

P10	R10.0400.10	M10	1.0
P12	R10.0400.12	M10	1.2
P16	R10.0400.16	M10	1.6

4000	R14.0000	BOT-40W-180°	
4022	R14.0220	BOT-40W-22°	
402F	R14.0222	BOT-40W-22°F	
402L	R14.0221	BOT-40W-22°L	
40LF	R14.0223	BOT-40W-22°LF	
4036	R14.0360	BOT-40W-36°	
4045	R14.0450	BOT-40W-45°	
404L	R14.0451	BOT-40W-45°L	

BOT-50W 550A- NOZZEL COOLING

T1	R12.0551	L60xD15.5
T2	R12.0552	L60xD18

BICOMP

P10	R10.0400.10	M10	1.0
P12	R10.0400.12	M10	1.2
P16	R10.0400.16	M10	1.6

5000	R15.0000	BOT-50W-180°	
5022	R15.0220	BOT-50W-22°	
502F	R15.0221	BOT-50W-22°F	
502L	R15.0222	BOT-50W-22°L	
503S	R15.0303	BOT-50W-30°S	
5036	R15.0360	BOT-50W-36°	
5045	R15.0450	BOT-50W-45°	

BOT-60W 600A NOZZEL COOLING

T1	R12.0612	L16xD18
T2	R12.0613	L16xD21

BICOMP

P10	R10.0400.10	M10	1.0
P12	R10.0400.12	M10	1.2
P16	R10.0400.16	M10	1.6

6000	R16.0000	BOT-60W-180°	
6022	R16.0220	BOT-60W-22°	
602L	R16.0221	BOT-60W-22°L	
602X	R16.0224	BOT-60W-22°XXL	
603X	R16.0364	BOT-60W-36°XXL	
604X	R16.0454	BOT-60W-45°XXL	

iBOT

IEXXXL	R95.1XXX	power cable	liquid Euro
IMXXXL	R95.2XXX	power cable	liquid Miller
IPXXXL	R95.3XXX	power cable	liquid Panasonic
IOXXXL	R95.4XXX	power cable	liquid OTC

IB	R51.0001	Anticolision

5660	R71.0010	D56x6
5860	R71.0040L	D58x6
6611	R71.0050	D66x11
5680	R71.0060L	D56x8
6480	R71.0061L	D64X8
8060	R71.0070	D80x6

e-BOT

EEXXXL	R92.1XXX	power cable	liquid Euro
EMXXXL	R92.2XXX	power cable	liquid Miller
EPXXXL	R92.3XXX	power cable	liquid Panasonic
EOXXXL	R92.4XXX	power cable	liquid OTC

EB	R53.0001	anticolision	
90	R41.1000	Bracket 90°	
67	R41.1023	Bracket 67°	

4040	R73.0010	D40x4
5040	R73.0020	D50x4

3.1

K1	R04.0000	Neck tool BOT

S1 + S2 + 1 + 2 + 3 + 4 +

Sample installation code: T1-P12-3022-IE137G-XX-IB-5860-K1

BOT series TIG LIQUID COOLING

S1 — S2 — 1 — 3 — 4

BOT-T5W 400A

T D H

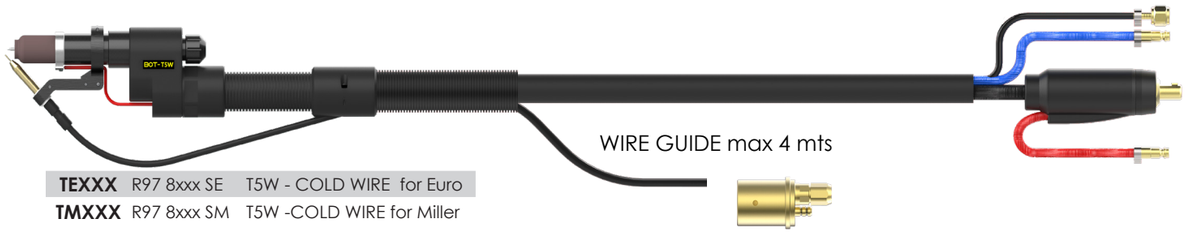

T1	T54N16	Nozzle G6
T2	T54N15	Nozzle G7
T3	T54N14	Nozzle G8
D1	R15 5304	Diffuser M14 2.4mm
D2	R15 5305	Diffuser M14 3.2mm
H1	R15 5524	E. holder 2.4 mm
H2	R15 5532	E. holder 3.2 mm

P10	R15 0110	M6 1.0
P12	R15 0112	M6 1.2

TEXXX	R97 8xxx SE	T5W - COLD WIRE for Euro
TMXXX	R97 8xxx SM	T5W -COLD WIRE for Miller

3.1

EB	R53.0001	anticolision
30	R41.5001	Bracket 30°

4040	R73.0010	D40x4
5040	R73.0020	D50x4

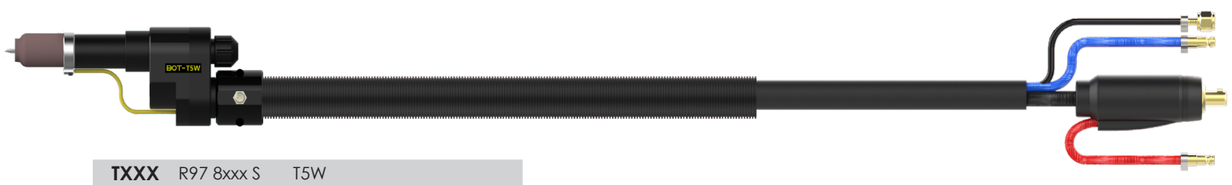

TXXX	R97 8xxx S	T5W

S1 + S2 + 1 + 3 + 4

Sample installation code: T1-D1-H1-P12-TE400-30-EB-4040

BOT

Welding torch

COMPONENTS AND
SPARE PARTS

1 2 3 4 5 6 7 8

1

Torch neck BOT-30G

MIG/MAG, GMAW,131,135
IEC60974-7

High resistance materials

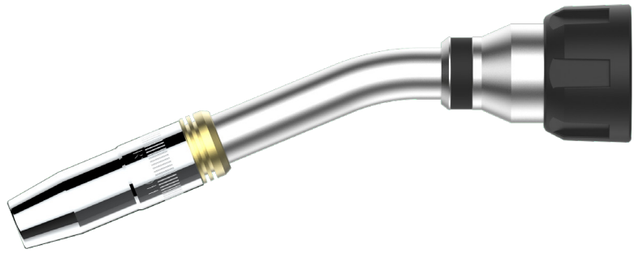

Gas

300 A - CO2 100%

250A - Mix M21 100%

Ø 1.0-1.2 mm

10-16 l/min

The capacity will be reduced by 35% whit pulsed arc.

Manufacturing characteristics.
~Use in most applications
~8-hole diffuser, better gas flow
~High thermal resistance materials
~High stability of TCP
~Stainless steel construction
~Medium working intensity

Applications
~Non-alloy and low alloy steels
~High alloy steels.

Pos.	CODE	TYPE	Min. Q.
1	R10 0011	Nozzle L76xØ15.5 mm	2
	R10 0012	Nozzle L76xØ13 mm	2
	R10 00211	Nozzle L79xØ15.5 mm	2
1.1	R10 0002	Insulator nozzle L32XØ20.75 mm	2
2	R10 0400 10	Contact tip M10 1.0 mm Cu-BICOMP	5
	R10 0400 12	Contact tip M10 1.2 mm Cu-BICOMP	5
	R10 0400 16	Contact tip M10 1.6 mm Cu-BICOMP	5
	R10 0401 08	Contact tip M10 0.8 mm CuCrZr	10
	R10 0401 10	Contact tip M10 1.0 mm CuCrZr	10
	R10 0401 12	Contact tip M10 1.2 mm CuCrZr	10
	R10 0401 16	Contact tip M10 1.6 mm CuCrZr	10
3	R12 0013	Diffuser L26xØ18.5 mm M10	2
4	R12 0308	Insulator neck L11XØ18.5 mm	2
5	R10 0401	Oring neck Ø23 mm	10
6	R10 1112	Liner for neck type N 217mm	1
10	R10 0115	Tip TCP M10-15mm programming	1
11	R04 0000	Neck tool BOT	1

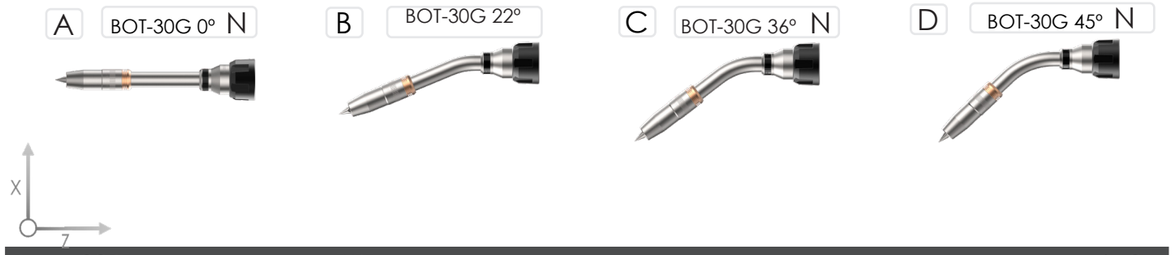

Pos.	CODE	TYPE	Min. Q.
A	R12 0000	Torch neck BOT-30G 0° (X=0 mm, Z=259 mm)-long type N	1
B	R12 0220	Torch neck BOT-30G 22° (X=64 mm, Z=247 mm)-long type N	1
C	R12 0360	Torch neck BOT-30G 36° (X=96 mm, Z=230 mm)-long type N	1
D	R12 0450	Torch neck BOT-30G 45° (X=111 mm, Z=217 mm)-long type N	1

2

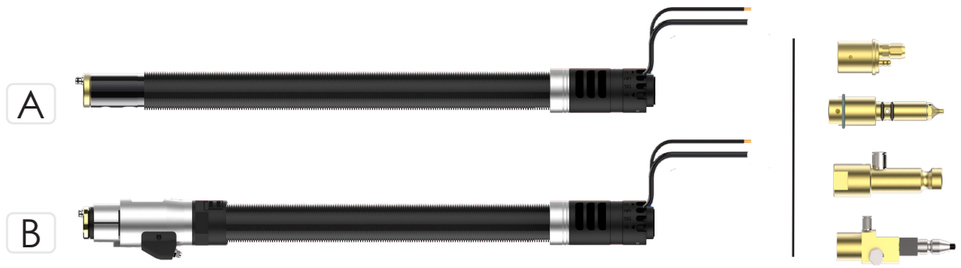

Pos.	CODE	TYPE	Min. Q.
A	R94 1xxx	Power cable gas iBOT-Euro type	1
	R94 2xxx	Power cable gas iBOT-Miller type	1
	R94 3xxx	Power cable gas iBOT-Panasonic type	1
	R94 4xxx	Power cable gas iBOT-OTC type	1
B	R91 1xxx	Power cable gas eBOT-Euro type	1
	R91 2xxx	Power cable gas eBOT-Miller type	1
	R91 3xxx	Power cable gas eBOT-Panasonic type	1
	R91 4xxx	Power cable gas eBOT-OTC type	1

xxx: Power cable length in cm

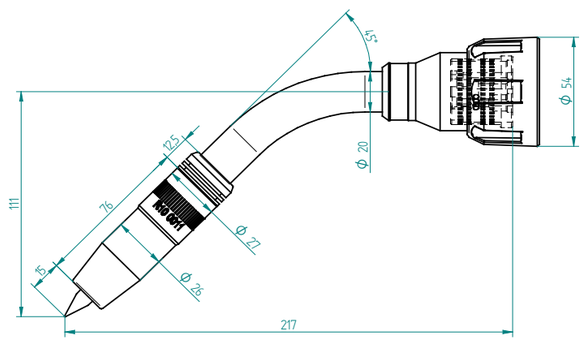

1

Torch neck BOT-31EC

MIG/MAG, GMAW,131,135
IEC60974-7

EASY cleaning Double Cooling

Liquid

- 350 A - CO2 100%
- 300A - Mix M21 100%
- Ø 0.8-1.2 mm
- 10-16 l/min
- The capacity will be reduced by 35% whit pulsed arc.

Manufacturing characteristics.
~Access to narrow places.
~Easy cleaning of welding spatter
~Separate gas, no leaks
~Double cooling circuit
~Stainless steel construction
~Medium working intensity

Applications
~Non-alloy and low alloy steels
~High alloy steels.

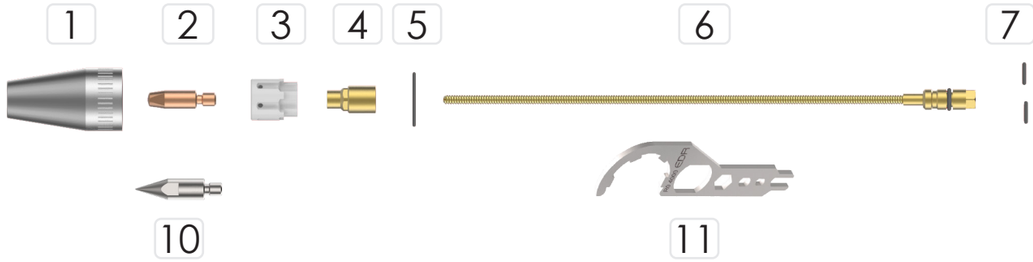

Pos.	CODE	TYPE	Min. Q.
1	R10 0301	Nozzle L47xØ13.5 mm	2
2	R10 0200 08	Contact tip M6 0.8 mm CuCrZr	10
	R10 0200 10	Contact tip M6 1.0 mm CuCrZr	10
	R10 0200 12	Contact tip M6 1.2 mm CuCrZr	10
3	R12 0314	Diffuser Insulator neck L19XØ18 mm	2
4	R10 2103	Tip holder L18xØ10 mm M6	2
5	R10 0401	Oring neck Ø23 mm	10
6	R10 1112	Liner for neck type N 217mm	1
	R10 1114	Liner for neck type SL 317mm	1
7	R12 0008	Oring neck water Ø9 mm	10
10	R10 0312	Tip TCP M6-12 mm programming	1
11	R04 0000	Neck tool BOT	1

A BOT-31W 0° N

B BOT-31W 22° N

C BOT-31W 36° N

D BOT-31W 45° N

E BOT-31W 45° SL

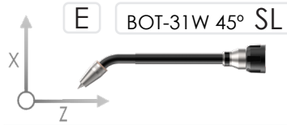

*Put S at the end of the code for model with nozzle sensor. Example R12 0220

Pos.	CODE	TYPE	Min. Q.
A	R13 1000	Torch neck BOT-31W 0° (X=0 mm, Z=243 mm)-long type N	1
B	R13 1220	Torch neck BOT-31W 22° (X=26 mm, Z=236 mm)-long type N	1
C	R13 1360	Torch neck BOT-31W 36° (X=44 mm, Z=227 mm)-long type N	1
D	R13 1450	Torch neck BOT-31W 45° (X=56 mm, Z=219 mm)-long type N	1
E	R13 1451	Torch neck BOT-31W 45°L (X=56 mm, Z=319 mm)-long type SL	1

2

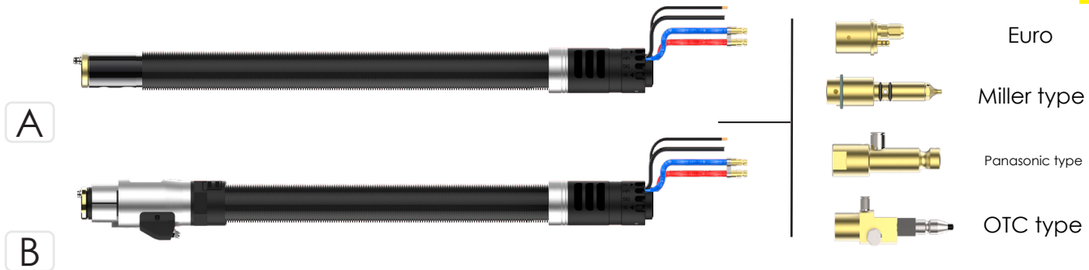

Pos.	CODE	TYPE	Min. Q.
A	R95 1xxx	Power cable liquid iBOT-Euro type	1
	R95 2xxx	Power cable liquid iBOT-Miller type	1
	R95 3xxx	Power cable liquid iBOT-Panasonic type	1
	R95 4xxx	Power cable liquid iBOT-OTC type	1
B	R92 1xxx	Power cable liquid eBOT-Euro type	1
	R92 2xxx	Power cable liquid eBOT-Miller type	1
	R92 3xxx	Power cable liquid eBOT-Panasonic type	1
	R92 4xxx	Power cable liquid eBOT-OTC type	1

xxx: Power cable length in cm

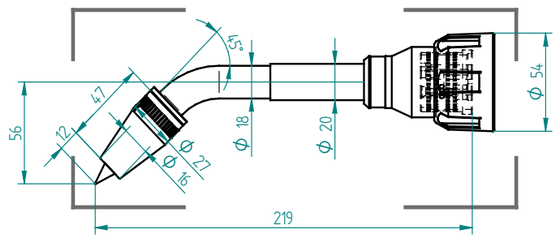

1

Torch neck BOT-32W

MIG/MAG, GMAW,131,135
IEC60974-7

Double Cooling

Liquid

- 350 A - CO2 100%
- 300A - Mix M21 100%
- Ø 0.8-1.2 mm
- 10-16 l/min
- The capacity will be reduced by 35% whit pulsed arc.

Manufacturing characteristics.
~Access to narrow places.
~8-hole diffuser, better gas flow
~Separate gas, no leaks
~Double cooling circuit
~Stainless steel construction
~Medium working intensity

Applications
~Non-alloy and low alloy steels
~High alloy steels.

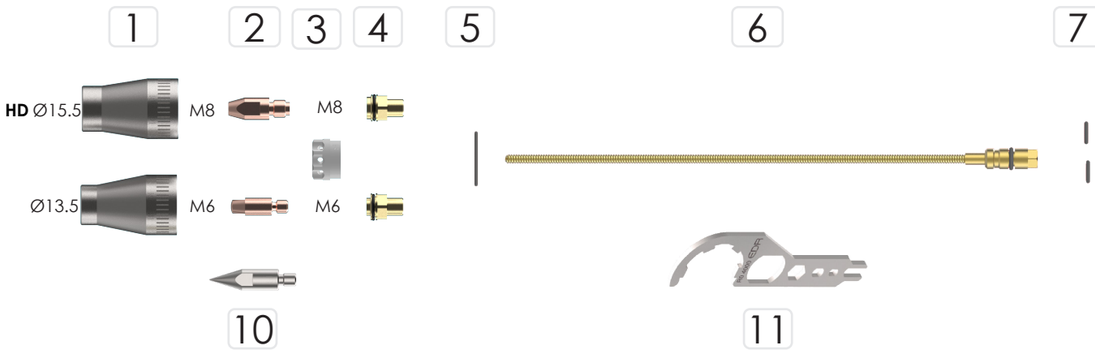

Pos.	CODE	TYPE	Min. Q.
1	R10 2311	Nozzle BOT-32W L47xØ13.5 mm	2
2	R10 2301	Nozzle BOT-32W L47xØ15.5 mm (option HD)	2
2	R10 0200 08	Contact tip M6 0.8 mm CuCrZr	10
	R10 0200 10	Contact tip M6 1.0 mm CuCrZr	10
	R10 0200 12	Contact tip M6 1.2 mm CuCrZr	10
	R10 0300 08	Contact tip M8 0.8 mm CuCrZr (option HD)	10
	R10 0300 10	Contact tip M8 1.0 mm CuCrZr (option HD)	10
	R10 0300 12	Contact tip M8 1.2 mm CuCrZr (option HD)	10
3	R12 0404	Diffuser Insulator neck L14XØ18.5 mm	2
4	R10 2203	Tip holder L18xØ12 mm M6	2
	R10 2213	Tip holder L18xØ12 mm M8 (option HD)	2
5	R10 0401	Oring neck Ø23 mm	10
6	R10 1112	Liner for neck type N 217mm	1
	R10 1114	Liner for neck type SL 317mm	1
7	R12 0008	Oring neck water Ø9 mm	10
10	R10 0312	Tip TCP M6-12 mm programming	1
11	R04 0000	Neck tool BOT	1

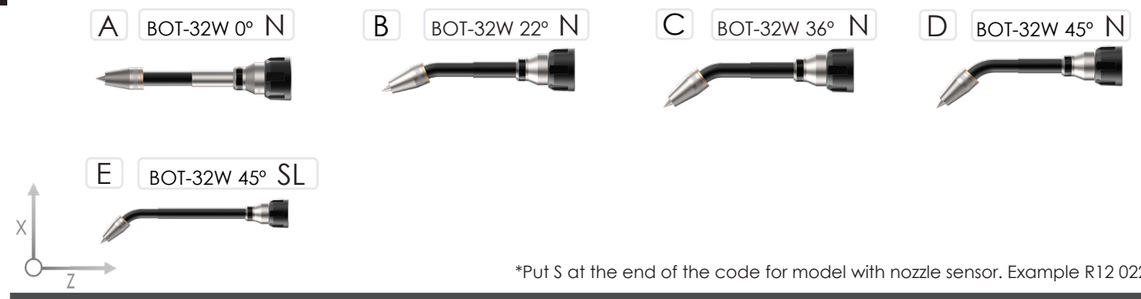

*Put S at the end of the code for model with nozzle sensor. Example R12 0220

Pos.	CODE	TYPE	Min. Q.
A	R13 2000	Torch neck BOT-32W 0° (X=0 mm, Z=243 mm)-long type N	1
B	R13 2220	Torch neck BOT-32W 22° (X=26 mm, Z=236 mm)-long type N	1
C	R13 2360	Torch neck BOT-32W 36° (X=44 mm, Z=227 mm)-long type N	1
D	R13 2450	Torch neck BOT-32W 45° (X=56 mm, Z=219 mm)-long type N	1
E	R13 2451	Torch neck BOT-32W 45°L (X=56 mm, Z=319 mm)-long type SL	1

2

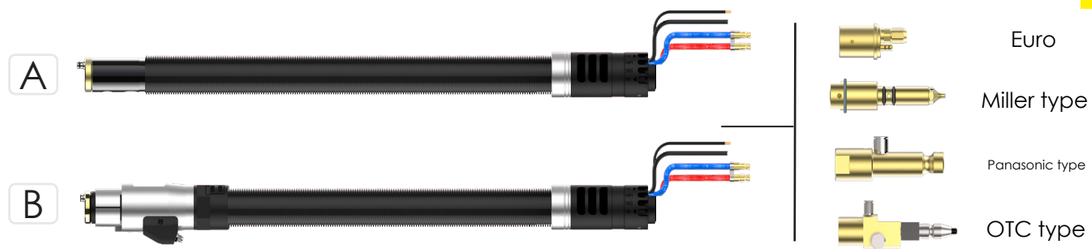

Pos.	CODE	TYPE	Min. Q.
A	R95 1xxx	Power cable liquid iBOT-Euro type	1
	R95 2xxx	Power cable liquid iBOT-Miller type	1
	R95 3xxx	Power cable liquid iBOT-Panasonic type	1
	R95 4xxx	Power cable liquid iBOT-OTC type	1
B	R92 1xxx	Power cable liquid eBOT-Euro type	1
	R92 2xxx	Power cable liquid eBOT-Miller type	1
	R92 3xxx	Power cable liquid eBOT-Panasonic type	1
	R92 4xxx	Power cable liquid eBOT-OTC type	1

xxx: Power cable length in cm

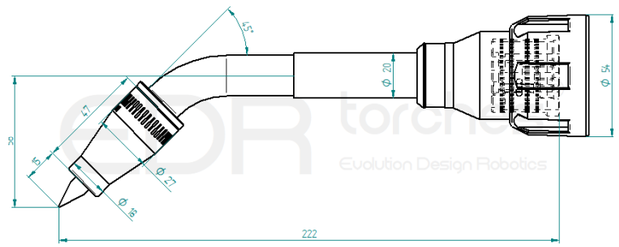

1

Torch neck BOT-41EC

MIG/MAG, GMAW,131,135
IEC60974-7

EASY cleaning Double Cooling

Liquid

400 A - CO2 100%

350A - Mix M21 100%

Ø 1.0-1.2 mm

10-16 l/min

The capacity will be reduced by 35% whit pulsed arc.

Manufacturing characteristics.
~Easy cleaning of welding spatter
~Separate gas, no leaks
~Double cooling circuit
~Stainless steel construction
~Medium working intensity

Applications
~Non-alloy and low alloy steels
~High alloy steels
~ Galvanised steels

Pos.	CODE	TYPE	Min. Q.
1	R10 0021	Nozzle EC L76xØ15.5 mm	2
2	R10 0300 10	Contact tip M8 1.0 mm Cu-BICOMP	10
	R10 0301 12	Contact tip M8 1.2 mm Cu-BICOMP	10
3	R12 0414	Diffuser Insulator nozzle L35XØ19.5	2
4	R10 0014	Tip holder L34 mm M8xM14	2
5	R10 0401	Oring neck Ø23 mm	2
6	R10 1112	Liner for neck type N 217mm	1
	R10 1113	Liner for neck type L 267mm	1
7	R12 0008	Oring neck water Ø9 mm	10
10	R10 0215	Tip TCP EC M8-15mm programming	1
11	R04 0000	Neck tool BOT	1

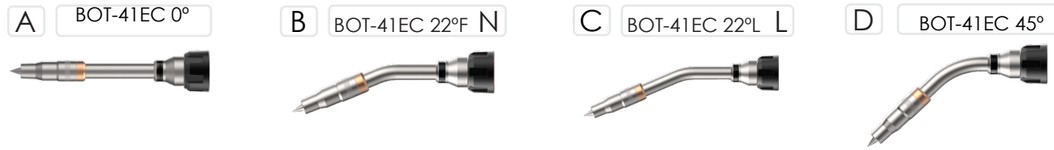

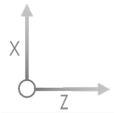

*Put S at the end of the code for model with nozzle sensor. Example R12 0220

Pos.	CODE	TYPE	Min. Q.
A	R14 1000	Torch neck BOT-41EC 0° (X=0 mm, Z=259 mm)-long type N	1
B	R14 1220	Torch neck BOT-41EC 22°F (X=50 mm, Z=250 mm)-long type N	1
C	R14 1221	Torch neck BOT-41EC 22°L (X=65 mm, Z=297 mm)-long type L	1
D	R14 1450	Torch neck BOT-41EC 45° (X=111 mm, Z=217 mm)-long type N	1

2

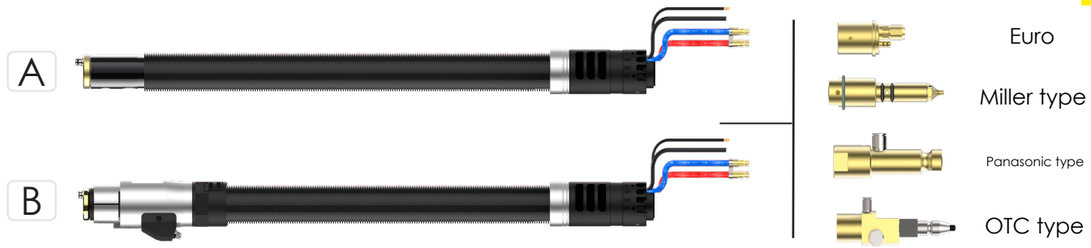

Pos.	CODE	TYPE	Min. Q.
A	R95 1xxx	Power cable liquid iBOT-Euro type	1
	R95 2xxx	Power cable liquid iBOT-Miller type	1
	R95 3xxx	Power cable liquid iBOT-Panasonic type	1
	R95 4xxx	Power cable liquid iBOT-OTC type	1
B	R92 1xxx	Power cable liquid eBOT-Euro type	1
	R92 2xxx	Power cable liquid eBOT-Miller type	1
	R92 3xxx	Power cable liquid eBOT-Panasonic type	1
	R92 4xxx	Power cable liquid eBOT-OTC type	1

xxx: Power cable length in cm

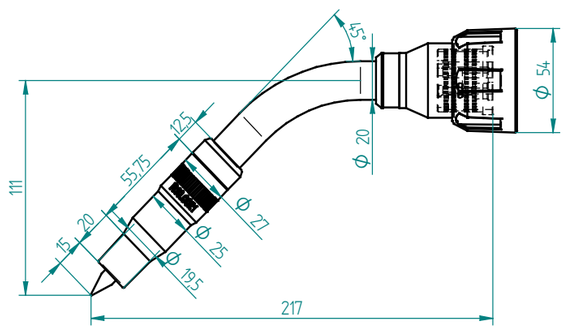

1

Torch neck BOT-40W

MIG/MAG, GMAW,131,135
IEC60974-7

COLDTip Double Cooling

Liquid

500 A - CO2 100%

400A - Mix M21 100%

Ø 1.0-1.6 mm

10-18 l/min

The capacity will be reduced by 35% whit pulsed arc.

Manufacturing characteristics.
~Use for most applications
~8-hole diffuser, better gas flow
~Separate gas, no leaks
~Double cooling circuit
~Stainless steel construction
~Hard working intensity

Applications
~Non-alloy and low alloy steels
~High alloy steels
~Aluminium, magnesium, copper and Nichel alloys

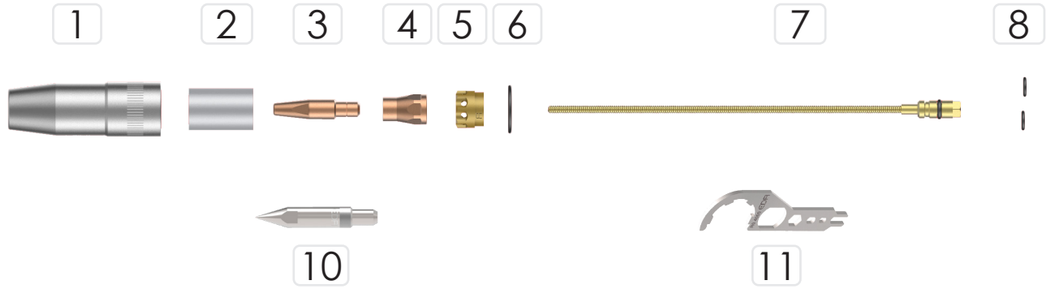

Pos.	CODE	TYPE	Min. Q.
1	R10 0011	Nozzle L76xØ15.5 mm	2
	R10 0012	Nozzle L76xØ13 mm	2
	R10 0211	Nozzle L79xØ15.5 mm	2
2	R10 0002	Insulator nozzle L32XØ20.75 mm	2
3	R10 0400 10	Contact tip M10 1.0 mm Cu-BICOMP	5
	R10 0400 12	Contact tip M10 1.2 mm Cu-BICOMP	5
	R10 0400 16	Contact tip M10 1.6 mm Cu-BICOMP	5
	R10 0401 08	Contact tip M10 0.8 mm CuCrZr	10
	R10 0401 10	Contact tip M10 1.0 mm CuCrZr	10
	R10 0401 12	Contact tip M10 1.2 mm CuCrZr	10
	R10 0401 16	Contact tip M10 1.6 mm CuCrZr	10
4	R10 0013	Tip holder L22xØ15 mm M10	2
5	R12 0404	Diffuser Insulator neck L14XØ18.5 mm	2
6	R10 0401	Oring neck Ø23 mm	10
7	R10 1112	Liner for neck type N 217mm	1
	R10 1113	Liner for neck type L 267mm	1
8	R12 0008	Oring neck water Ø9 mm	10
10	R10 0115	Tip TCP M10-15mm programming	1
11	R04 0000	Neck tool BOT	1

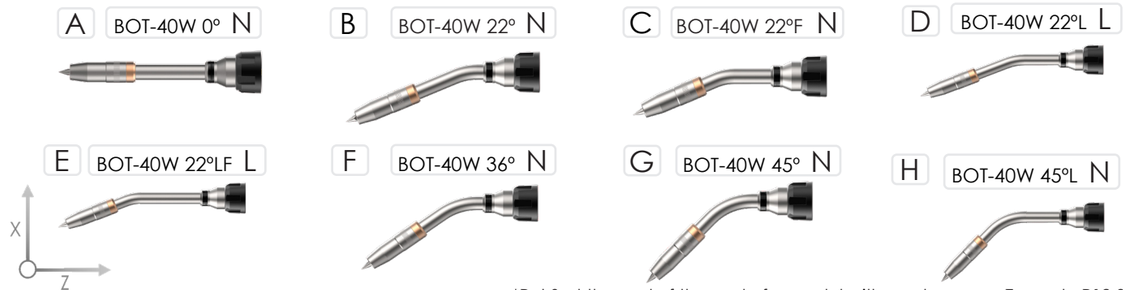

*Put S at the end of the code for model with nozzle sensor. Example R12 0220

Pos.	CODE	TYPE	Min. Q.
A	R14 0000	Torch neck BOT-40W 0° (X=0 mm, Z=259 mm)-long type N	1
B	R14 0220	Torch neck BOT-40W 22° (X=64 mm, Z=247 mm)-long type N	1
C	R14 0222	Torch neck BOT-40W 22°F (X=50 mm, Z=250 mm)-long type N	1
D	R14 0221	Torch neck BOT-40W 22°L (X=64 mm, Z=297 mm)-long type L	1
E	R14 0223	Torch neck BOT-40W 22°LF (X=50 mm, Z=300 mm)-long type L	1
F	R14 0360	Torch neck BOT-40W 36° (X=96 mm, Z=230 mm)-long type N	1
G	R14 0450	Torch neck BOT-40W 45° (X=111 mm, Z=217 mm)-long type N	1
H	R14 0451	Torch neck BOT-40W 45°L (X=111 mm, Z=267 mm)-long type L	1

2

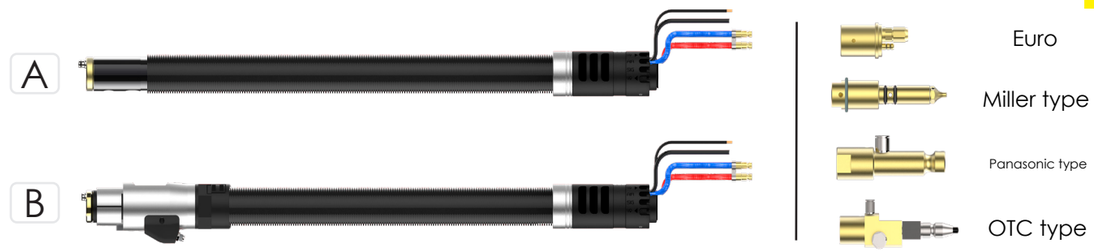

Pos.	CODE	TYPE	Min. Q.
A	R95 1xxx	Power cable liquid iBOT-Euro type	1
	R95 2xxx	Power cable liquid iBOT-Miller type	1
	R95 3xxx	Power cable liquid iBOT-Panasonic type	1
	R95 4xxx	Power cable liquid iBOT-OTC type	1
B	R92 1xxx	Power cable liquid eBOT-Euro type	1
	R92 2xxx	Power cable liquid eBOT-Miller type	1
	R92 3xxx	Power cable liquid eBOT-Panasonic type	1
	R92 4xxx	Power cable liquid eBOT-OTC type	1

xxx: Power cable length in cm

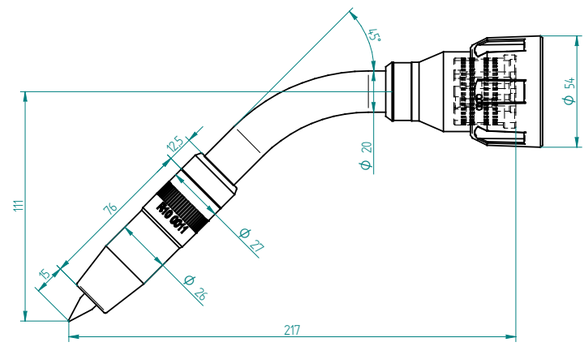

Torch neck BOT-50W

MIG/MAG, GMAW,131,135
IEC60974-7

COLDTip Double Cooling

Liquid

550 A - CO2 100%

450A - Mix M21 100%

Ø 1.0-1.6 mm

10-18 l/min

The capacity will be reduced by 35% whit pulsed arc.

Manufacturing characteristics.
~For high working cycles
~Nozzle cooling
~8-hole diffuser, better gas flow
~Separate gas, no leaks
~Double cooling circuit
~Stainless steel construction
~High working intensity

Applications
~Non-alloy and low alloy steels
~High alloy steels
~Aluminium, magnesium, copper and Nichel alloys

Pos.	CODE	TYPE	Min. Q.
1	R12 0551	Nozzle L60xØ15.5 mm	2
	R12 0552	Nozzle L60xØ18 mm	2
2	R10 0602	Insulator nozzle L28XØ23 mm	2
3	R10 0400 10	Contact tip M10 1.0 mm Cu-BICOMP	5
	R10 0400 12	Contact tip M10 1.2 mm Cu-BICOMP	5
	R10 0400 16	Contact tip M10 1.6 mm Cu-BICOMP	5
	R10 0401 08	Contact tip M10 0.8 mm CuCrZr	10
	R10 0401 10	Contact tip M10 1.0 mm CuCrZr	10
	R10 0401 12	Contact tip M10 1.2 mm CuCrZr	10
	R10 0401 16	Contact tip M10 1.6 mm CuCrZr	10
4	R10 0013	Tip holder L22xØ15 mm M10	2
5	R12 0604	Diffuser Insulator neck L16XØ20.5 mm	2
6	R12 0608	Oring nozzle BOT-50	10
7	R12 0550	Nozzle support L36XØ30 mm	1
8	R12 0607	Oring neck Ø24 mm	10
9	R10 1112	Liner for neck type N 217mm	1
	R10 1113	Liner for neck type L 267mm	1
	R10 1115	Liner for neck type S 330mm	1
10	R12 0008	Oring neck water Ø9	10
11	R10 0115	Tip TCP M10-18mm programming	1
12	R04 0000	Neck tool BOT	1

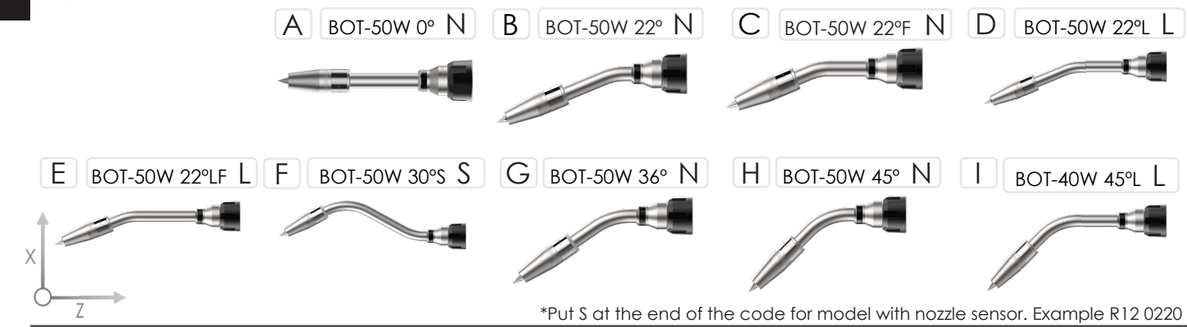

*Put S at the end of the code for model with nozzle sensor. Example R12 0220

Pos.	CODE	TYPE	Min. Q.
A	R15 0000	Torch neck BOT-50W 0° (X=0 mm, Z=259 mm)-long type N	1
B	R15 0220	Torch neck BOT-50W 22° (X=64 mm, Z=247 mm)-long type N	1
C	R15 0221	Torch neck BOT-50W 22°F (X=50 mm, Z=250 mm)-long type N	1
D	R15 0222	Torch neck BOT-50W 22°L (X=64 mm, Z=297 mm)-long type L	1
E	R15 0223	Torch neck BOT-50W 22°LF (X=50 mm, Z=300 mm)-long type L	1
F	R15 0303	Torch neck BOT-50W 30°S (X=0 mm, Z=347 mm)-long type S	1
G	R15 0360	Torch neck BOT-50W 36° (X=96 mm, Z=230 mm)-long type N	1
H	R15 0450	Torch neck BOT-50W 45° (X=111 mm, Z=217 mm)-long type N	1
I	R15 0451	Torch neck BOT-50W 45°L (X=111 mm, Z=267 mm)-long type L	1

2

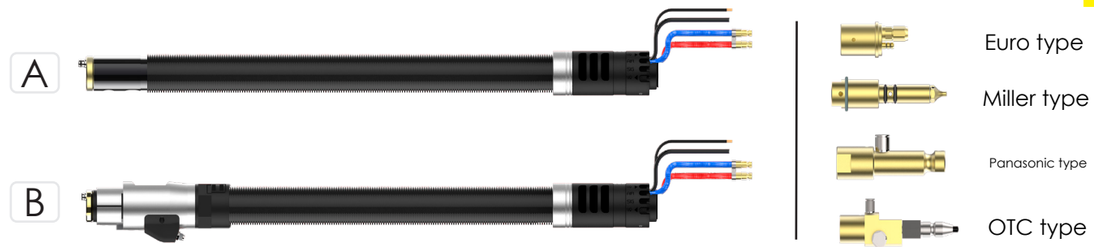

Pos.	CODE	TYPE	Min. Q.
A	R95 1xxx	Power cable liquid iBOT-Euro type	1
	R95 2xxx	Power cable liquid iBOT-Miller type	1
	R95 3xxx	Power cable liquid iBOT-Panasonic type	1
	R95 4xxx	Power cable liquid iBOT-OTC type	1
B	R92 1xxx	Power cable liquid eBOT-Euro type	1
	R92 2xxx	Power cable liquid eBOT-Miller type	1
	R92 3xxx	Power cable liquid eBOT-Panasonic type	1
	R92 4xxx	Power cable liquid eBOT-OTC type	1

xxx: Power cable length in cm

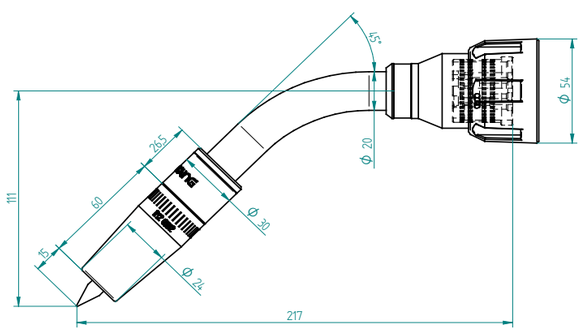

1

Torch neck BOT-60W

MIG/MAG, GMAW,131,135
IEC60974-7

COLDTip Double Cooling

Liquid

600 A - CO2 100%

500A - Mix M21 100%

Ø 1.0-2.4* mm

10-20 l/min

The capacity will be reduced by 35% whit pulsed arc.

*** Only on special order**

Manufacturing characteristics.
~For high working cycles
~Full nozzel cooling
~8-hole diffuser, better gas flow
~Separate gas, no leaks
~Double cooling circuit
~Stainless steel construction
~High working intensity

Applications
~Non-alloy and low alloy steels
~High alloy steels
~Aluminium, magnesium, copper and Nichel alloys

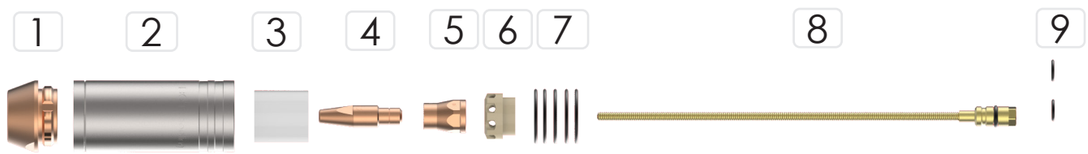

Pos.	CODE	TYPE	Min. Q.
1	R12 0612	Nozzle L16xØ18 mm	2
	R12 0613	Nozzle L16xØ21 mm	2
2	R12 0609	Nozzle support L83XØ32 mm	1
3	R10 0602	Insulator nozzle L28XØ23 mm	2
4	R10 0400 10	Contact tip M10 1.0 mm Cu-BICOMP	5
	R10 0400 12	Contact tip M10 1.2 mm Cu-BICOMP	5
	R10 0400 16	Contact tip M10 1.6 mm Cu-BICOMP	5
	R10 0401 08	Contact tip M10 0.8 mm CuCrZr	10
	R10 0401 10	Contact tip M10 1.0 mm CuCrZr	10
	R10 0401 12	Contact tip M10 1.2 mm CuCrZr	10
	R10 0401 16	Contact tip M10 1.6 mm CuCrZr	10
	R10 0401 24	Contact tip M10 2.4 mm CuCrZr	bp
4.1	R10 0118	Tip TCP M10-18mm programming	1
5	R10 0013	Tip holder L22xØ15 mm M10	2
6	R12 0604	Diffuser insulator neck L16XØ20.5 mm	2
7	R12 0607	Oring neck Ø24 mm	10
8	R10 1112	Liner for neck type N 217mm	1
	R10 1113	Liner for neck type L 267mm	1
	R10 1116	Liner for neck type XXL 421mm	1
9	R12 0008	Oring neck water Ø9	10
10	R10 0118	Tip TCP M10-18mm programming	1
11	R04 0000	Neck tool BOT	1

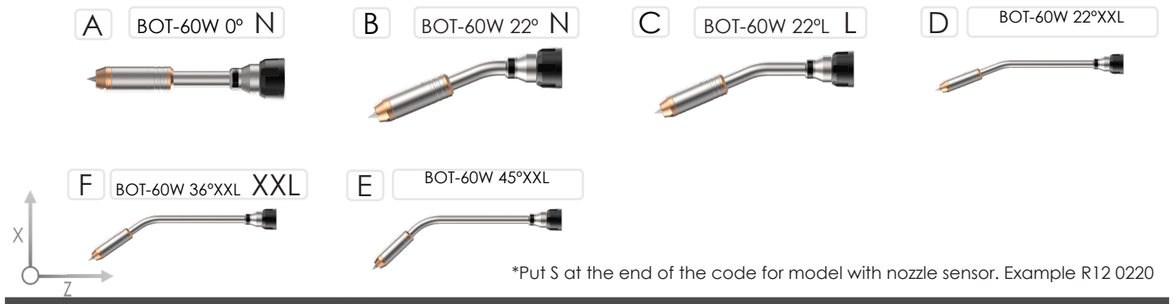

*Put S at the end of the code for model with nozzle sensor. Example R12 0220

Pos.	CODE	TYPE	Min. Q.
1	R04 0000	Neck tool BOT	1
A	R16 0000	Torch neck BOT-60W 0° (X=0 mm, Z=259 mm)-long type N	1
B	R16 0220	Torch neck BOT-60W 22° (X=64 mm, Z=247 mm)-long type N	1
C	R16 0221	Torch neck BOT-60W 22°L (X=64 mm, Z=297 mm)-long type L	1
D	R16 0224	Torch neck BOT-60W 22°XXL (X=69 mm, Z=453 mm)-long type XXL	1
E	R16 0364	Torch neck BOT-60W 36°XXL (X=103 mm, Z=435 mm)-long type XXL	1
F	R16 0454	Torch neck BOT-60W 45°XXL (X=121 mm, Z=419 mm)-long type XXL	1

2

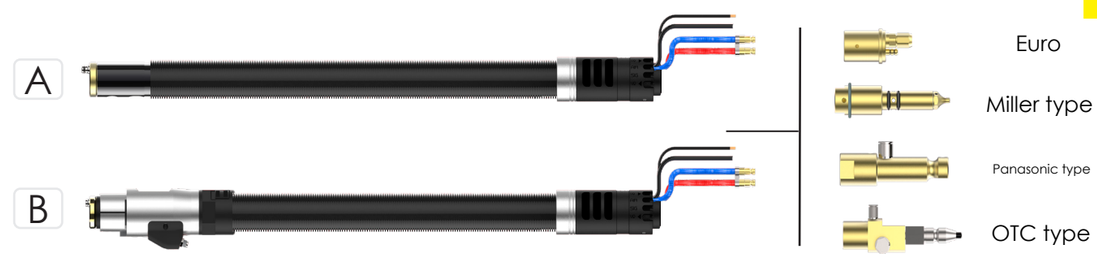

Pos.	CODE	TYPE	Min. Q.
A	R95 1xxx	Power cable liquid iBOT-Euro type	1
	R95 2xxx	Power cable liquid iBOT-Miller type	1
	R95 3xxx	Power cable liquid iBOT-Panasonic type	1
	R95 4xxx	Power cable liquid iBOT-OTC type	1
B	R92 1xxx	Power cable liquid eBOT-Euro type	1
	R92 2xxx	Power cable liquid eBOT-Miller type	1
	R92 3xxx	Power cable liquid eBOT-Panasonic type	1
	R92 4xxx	Power cable liquid eBOT-OTC type	1

xxx: Power cable length in cm

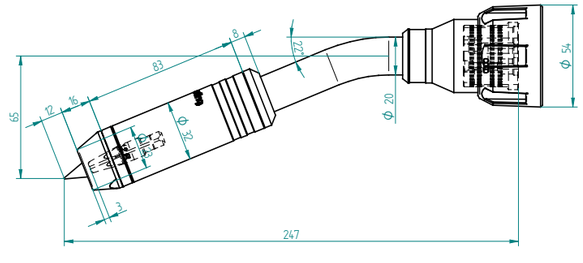

Torch neck BOT-T5W

TIG, TMAW,141
IEC60974-7

LONG LIFE COLLET

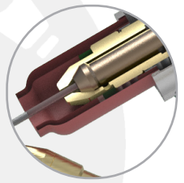

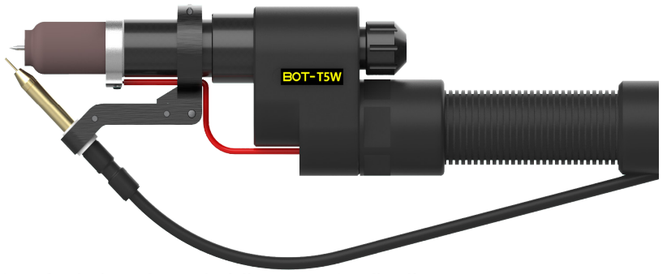

Liquid

400A - CD 100%

300A - AC 100%

Ø 1.6-4.8 mm

4-12 l/min

The capacity will be reduced by 35% whit pulsed arc.

Manufacturing characteristics.
~Tungsten holders of large dimensions and high durability
~Ring improves HF stability
~Adjustment of the position of the supply wire
~Double insulation on handle and connection disk
~Medium working intensity
~Connector for anti-collision system

Applications
~Non-alloy and low alloy steels
~High alloy steels

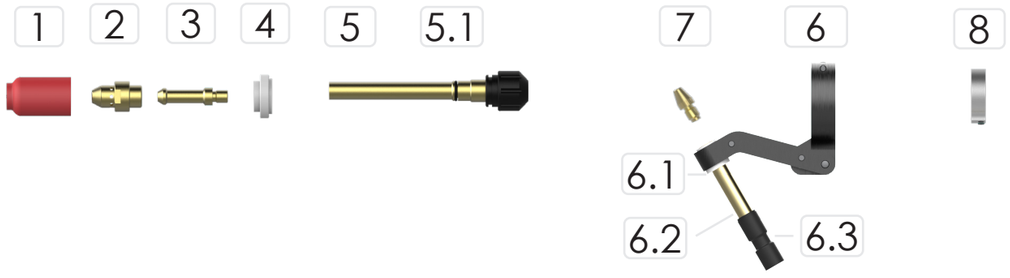

Pos.	CODE	TYPE	Min. Q.
1	T54N16	Nozzle G6	10
	T54N15	Nozzle G7	10
	T54N14	Nozzle G8	10
2	R15 5304	Diffuser M14 2.4mm	2
	R15 5305	Diffuser M14 3.2mm	2
3	R15 5524	Electrode holder 2.4 mm	2
	R15 5532	Electrode holder 3.2 mm	2
4	R15 5303	Insulator Nozzle	2
5	R15 5502	Clamping element	1
5.1	R15 0502	Oring clamping element	5
6	R15 0301	Support Wire guide TW	1
6.1	R15 0031	Wire guide insulator TW	1
6.2	R15 0021	wire guide TW	1
6.3	R15 0024	Support liner D6 TW	1
7	R15 0110	Tip Dia 1.0 mm	5
	R15 0112	Tip Dia. 1.2 mm (RECOMMENDED)	5
8	R15 0603	HF protective ring	1

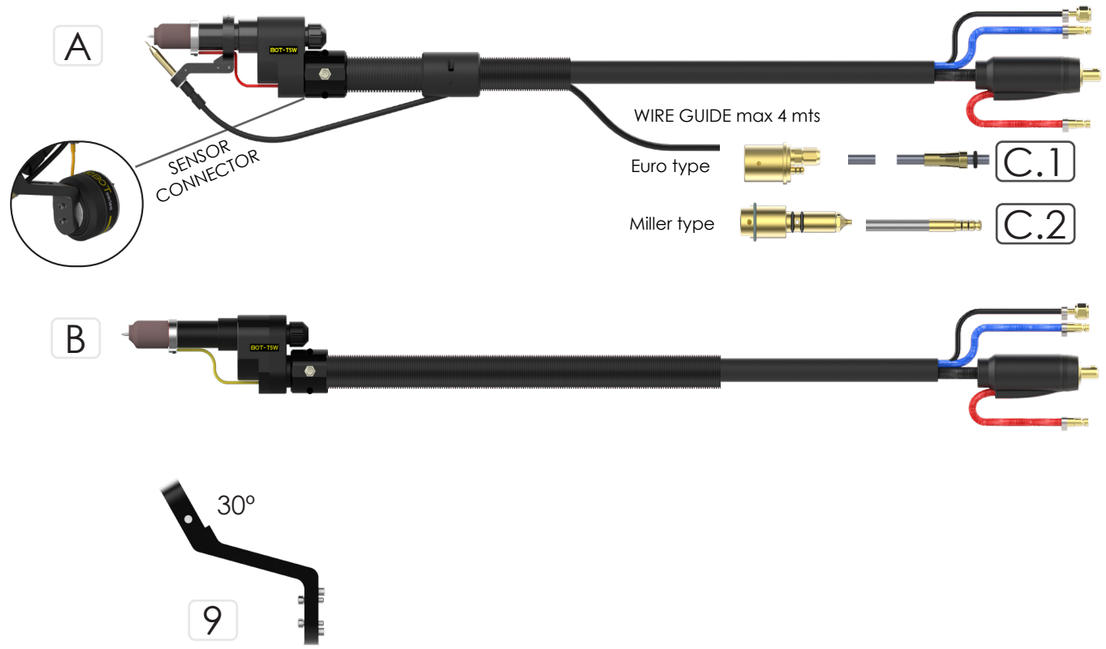

Pos.	CODE	TYPE	Min. Q.
A	R97 8xxx SE	Welding torch TIG T5W - COLD WIRE Euro type-SENSOR	1
	R97 8xxx SM	Welding torch TIG T5W -WIRE Miller type-SENSOR	1
B	R97 8xxx S	Welding torch TIG T5W -SENSOR	1
C.1	M99 8002	Guide PA itBOT L2700xD4xD2mm(1.0-1.2)-Euro	1
	M99 8003	Guide PA itBOT L3700xD4xD2mm(1.0-1.2)-Euro	1
	M99 8004	Guide PA itBOT L4700xD4xD2mm(1.0-1.2)-Euro	1
C.2	M99 1502	Guide PA itBOT L2700xD4xD2mm(1.0-1.2)-Miller	1
	M99 1503	Guide PA itBOT L3700xD4xD2mm(1.0-1.2)-Miller	1
	M99 1504	Guide PA itBOT L4700xD4xD2mm(1.0-1.2)-Miller	1
9	R41 5001	Bracket TIG T5W 30º	1

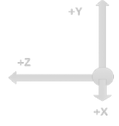

DATA	
Weight (kg)	1.320 kg
TCP mm (tool center point)	Y:50, Z:246
GC mm (gravity center)	Y:61 / Z:73

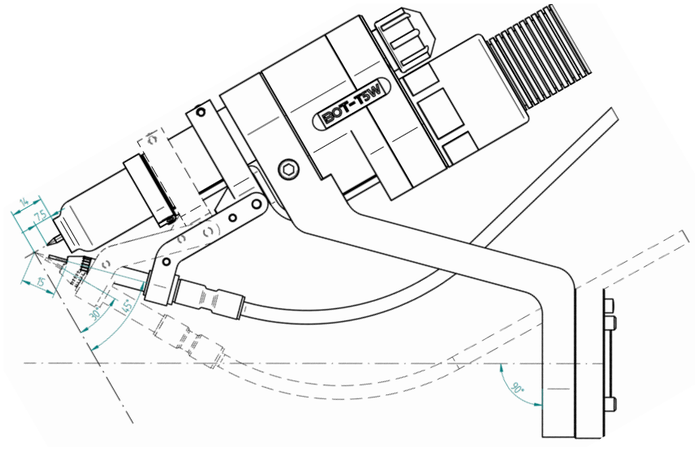

Power cable iBOT

MIG/MAG, GMAW,131,135
IEC60974-7

FOURPower

Liquid

600A - CO2 100%

Turn +-360º (720º)

Gas

500A - CO2 100%

Turn +-360º (720º)

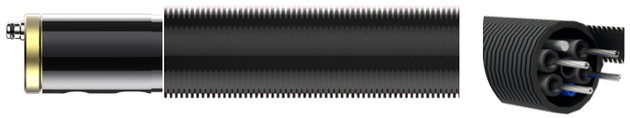

Manufacturing characteristics.
~Four power cables (liquid)
~High torque capacity 720º(liquid)
~Heavy duty outer cover
~Blower gas system
~Possibility of wire brake(liquid)

Wire brake module (only liquid cable)
~Air pressure Wire Brake 6-8 bars
~Compatible wire 1.0 1.2 mm
~ Compressed air tube, dia. 4 mm

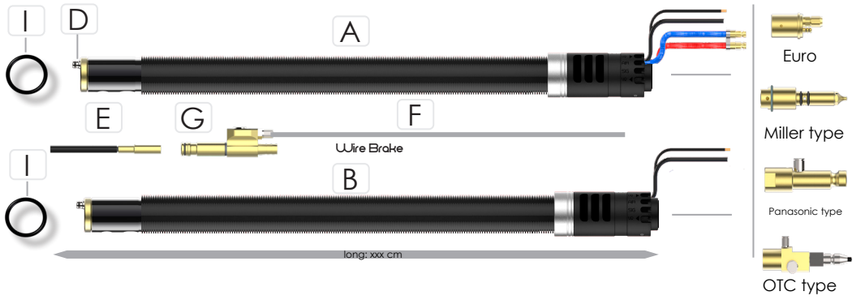

Pos.	CODE	TYPE	Min. Q.
A	R95 1xxx	Power cable liquid iBOT-Euro type	1
	R95 2xxx	Power cable liquid iBOT-Miller type	1
	R95 3xxx	Power cable liquid iBOT-Panasonic type	1
	R95 4xxx	Power cable liquid iBOT-OTC type	1
	R95 1xxxWB	Power cable liquid iBOT-Euro type -WIRE BRAKE	1
	R95 2xxxWB	Power cable liquid iBOT-Miller type - WIRE BRAKE	1
	R95 3xxxWB	Power cable liquid iBOT-Panasonic type - WIRE BRAKE	1
	R95 4xxxWB	Power cable liquid iBOT-OTC type- WIRE BRAKE	1
B	R94 1xxx	Power cable gas iBOT-Euro type	1
	R94 2xxx	Power cable gas iBOT-Miller type	1
	R94 3xxx	Power cable gas iBOT-Panasonic type	1
	R94 4xxx	Power cable gas iBOT-OTC type	1
D	R20 0603	Oring power cable gas Ø9	10
E	R90 4004WB	Liner for wire brake wire 1.0 - 1.2 mm	1
F	R9 0400 05	Pneumatic tube D4mm (mts)	1
G	R9 0400	Set of wire brake locking system	1
I	R6 0203 02	O-ring protection BOT Ø32	2

Power cable eBOT

MIG/MAG, GMAW,131,135
IEC60974-7

Liquid

600A - CO2 100%

Turn +-240º (480º)

Gas

500A - CO2 100%

Turn +-240º (480º)

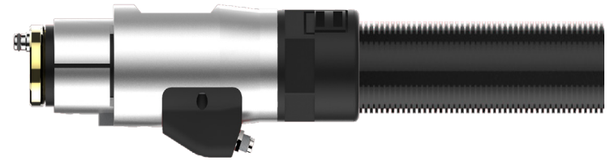

Manufacturing characteristics.
~Four power cables (liquid)
~High torque capacity
~Heavy duty outer cover
~Blower gas system
~Possibility of wire brake(liquid)

Wire brake module (only liquid cable)
~Air pressure Wire Brake 6-8 bars
~Compatible wire 1.0 1.2 mm
~ Compressed air tube, dia. 4 mm

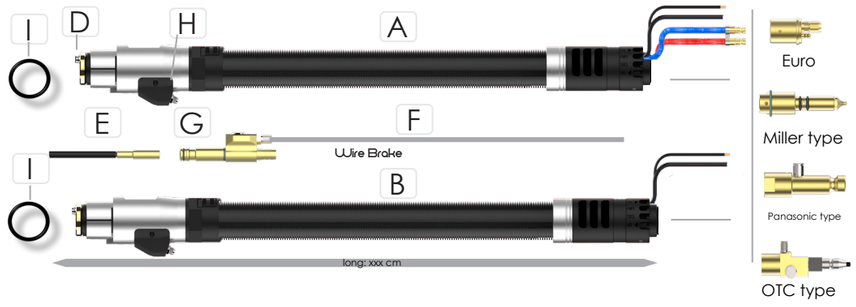

Pos.	CODE	TYPE	Min. Q.
A	R92 1xxx	Power cable liquid eBOT-Euro type	1
	R92 2xxx	Power cable liquid eBOT-Miller type	1
	R92 3xxx	Power cable liquid eBOT-Panasonic type	1
	R92 4xxx	Power cable liquid eBOT-OTC type	1
	R92 1xxxWB	Power cable liquid eBOT-Euro type -WIRE BRAKE	1
	R92 2xxxWB	Power cable liquid eBOT-Miller type - WIRE BRAKE	1
	R92 3xxxWB	Power cable liquid eBOT-Panasonic type - WIRE BRAKE	1
	R92 4xxxWB	Power cable liquid eBOT-OTC type	1
B	R91 1xxx	Power cable gas eBOT-Euro type	1
	R91 2xxx	Power cable gas eBOT-Miller type	1
	R91 3xxx	Power cable gas eBOT-Panasonic type	1
	R91 4xxx	Power cable gas eBOT-OTC type	1
D	R20 0603	Oring power cable gas Ø9	10
E	R90 4004WB	Liner for wire brake wire 1.0 - 1.2 mm	1
F	R9 0400 05	Pneumatic tube D4mm (mts)	1
G	R9 0400	Set of wire brake locking system	1
H	R30 0003	Connections Box	1
I	R6 0203 02	O-ring protection BOT Ø32	2

2

Euro type

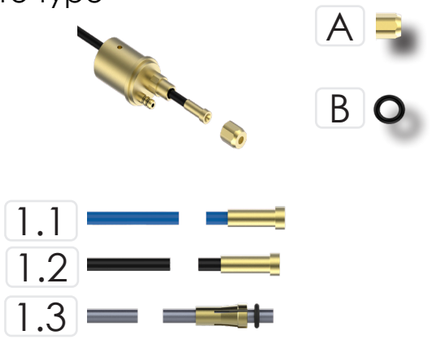

Miller type

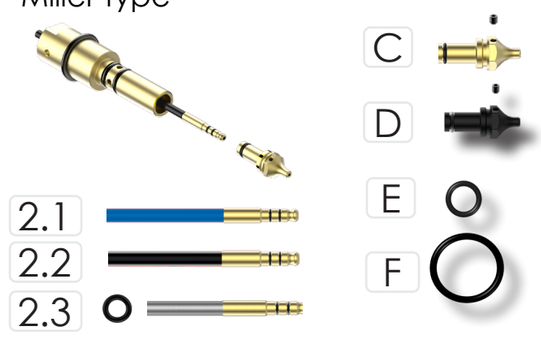

Panasonic type

OTC type

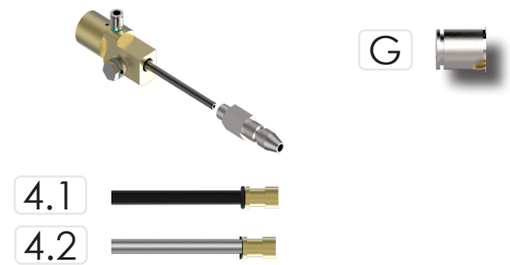

Pos.	CODE	TYPE	Min. Q.
A	R6 0000 04	Guide cap Euro-BOT	1
B	R2 2000 0206	O-ring gas connection Euro	10
C	R60 0014	Guide cap Miller-BOT	1
D	R60 0114	Guide cap Alum. Miller-BOT	1
E	R6 0001 02	O-ring gas connection Miller	4
F	R6 0203 02	O-ring protection BOT Ø32	2
G	R6 0202 03	Tube gas connector D6	1
1.1	M99 4101	Guide blue BOT L1600xD4.6xD1.5mm(0.8-1.0)-Euro	1
	M99 4102	Guide blue BOT L2600xD4.6xD1.5mm(0.8-1.0)-Euro	1
	M99 4103	Guide blue BOT L3600xD4.6xD1.5mm(0.8-1.0)-Euro	1
	M99 4104	Guide blue BOT L4600xD4.6xD1.5mm(0.8-1.0)-Euro	1
1.2	M99 4001	Guide black BOT L1600xD5.3xD2.2mm(1.2-1.6)-Euro	1
	M99 4002	Guide black BOT L2600xD5.3xD2.2mm(1.2-1.6)-Euro	1
	M99 4003	Guide black BOT L3600xD5.3xD2.2mm(1.2-1.6)-Euro	1
	M99 4004	Guide black BOT L4600xD5.3xD2.2mm(1.2-1.6)-Euro	1
1.3	M99 7001	Guide for Alum BOT L1700xD4.5xD2.5mm(1.2-1.6)-Euro	1
	M99 7002	Guide for Alum BOT L2700xD4.5xD2.5mm(1.2-1.6)-Euro	1
	M99 7003	Guide for Alum BOT L3700xD4.5xD2.5mm(1.2-1.6)-Euro	1
	M99 7004	Guide for Alum BOT L4700xD4.5xD2.5mm(1.2-1.6)-Euro	1
2.1	M99 1001	Guide blue BOT L1600xD4.6xD1.5mm(0.8-1.0)-Miller	1
	M99 1002	Guide blue BOT L2600xD4.6xD1.5mm(0.8-1.0)-Miller	1
	M99 1003	Guide blue BOT L3600xD4.6xD1.5mm(0.8-1.0)-Miller	1
	M99 1004	Guide blue BOT L4600xD4.6xD1.5mm(0.8-1.0)-Miller	1

Pos.	CODE	TYPE	Min. Q.
2.2	M99 1101	Guide black BOT L1600xD5.3xD2.2mm(1.2-1.6)-Miller	1
	M99 1102	Guide black BOT L2600xD5.3xD2.2mm(1.2-1.6)-Miller	1
	M99 1103	Guide black BOT L3600xD5.3xD2.2mm(1.2-1.6)-Miller	1
	M99 1104	Guide black BOT L4600xD5.3xD2.2mm(1.2-1.6)-Miller	1
2.3	M99 1401	Guide for Alum BOT L1700xD4.5xD2.5mm(1.2-1.6)-Miller	1
	M99 1402	Guide for Alum BOT L2700xD4.5xD2.5mm(1.2-1.6)-Miller	1
	M99 1403	Guide for Alum BOT L3700xD4.5xD2.5mm(1.2-1.6)-Miller	1
	M99 1404	Guide for Alum BOT L4700xD4.5xD2.5mm(1.2-1.6)-Miller	1
3.1	M99 1301	Guide blue BOT L1600xD4.6xD1.5mm(0.8-1.0)-Panasonic	1
	M99 1302	Guide blue BOT L2600xD4.6xD1.5mm(0.8-1.0)-Panasonic	1
	M99 1303	Guide blue BOT L3600xD4.6xD1.5mm(0.8-1.0)-Panasonic	1
	M99 1304	Guide blue BOT L4600xD4.6xD1.5mm(0.8-1.0)-Panasonic	1
3.2	M99 1201	Guide black BOT L1600xD5.3xD2.2mm(1.2-1.6)-Panasonic	1
	M99 1202	Guide black BOT L2600xD5.3xD2.2mm(1.2-1.6)-Panasonic	1
	M99 1203	Guide black BOT L3600xD5.3xD2.2mm(1.2-1.6)-Panasonic	1
	M99 1204	Guide black BOT L4600xD5.3xD2.2mm(1.2-1.6)-Panasonic	1
4.1	M99 OTN1	Guide black BOT L1600xD5.3xD2.2mm(1.0-1.2)-OTC	1
	M99 OTN2	Guide black BOT L2600xD5.3xD2.2mm(1.0-1.2)-OTC	1
	M99 OTN3	Guide black BOT L3600xD5.3xD2.2mm(1.0-1.2)-OTC	1
	M99 OTN4	Guide black BOT L4600xD5.3xD2.2mm(1.0-1.2)-OTC	1
4.2	M99 OTAL1	Guide for alum BOT L1600xD4.5xD2.5mm(1.0-1.2)-OTC	1
	M99 OTAL2	Guide for alum BOT L2600xD4.3xD2.5mm(1.0-1.2)-OTC	1
	M99 OTAL3	Guide for alum BOT L3600xD4.5xD2.5mm(1.0-1.2)-OTC	1
	M99 OTAL4	Guide for alum BOT L4600xD4.3xD2.5mm(1.0-1.2)-OTC	1

Anti-collision system iBOT

MIG/MAG, GMAW,131,135

CEROFit

- 930g -L100 x Ø96 mm
- Max. X,Y:10º / Z:7mm
- Sensor X,Y:1º / Z:0.7mm
- Sensor 250V DC-100mA-NC
- Max. 2.5 kg
- 0.1 to 300 mm

Manufacturing characteristics.
~Rubber protection for high temperature and IP63 sealing
~Internal system of 6 points of support avoids dead zones of low resistance to movement
~Three independent sensors

~Machining of interlocking systems CEROFit. Machined parts in the same sequence

A B C

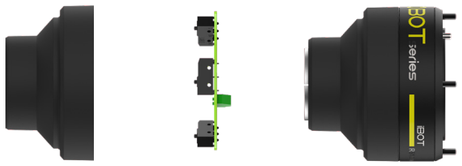

Pos.	CODE	TYPE	Min. Q.
A	R51 0011	Protection cover iBOT	1
B	R50 0014	Anti-collisión sensor BOT	1
C	R51 0001	Anti-collision iBOT	1

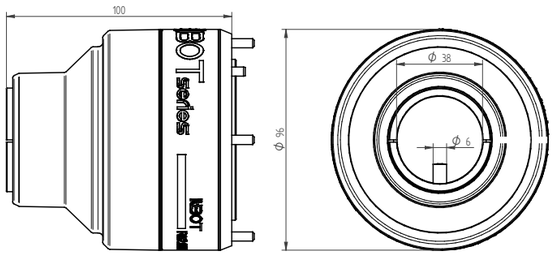

Anti-collision system eBOT

MIG/MAG, GMAW,131,135
TIG, TMAW,141

CEROFit

- 910g -L62 x Ø96 mm
- Max. X,Y:10º / Z:7mm
- Sensor X,Y:1º / Z:0.7mm
- Sensor 250V DC-100mA-NC
- Max. 5.0 kg
- 0.1 to 300 mm

Manufacturing characteristics.
~Rubber protection for high temperature and IP63 sealing
~Internal system of 6 points of support avoids dead zones of low resistance to movement
~Three independent sensors

~Machining of interlocking systems CEROFit. Machined parts in the same sequence

1 2 3 4 5 A B C

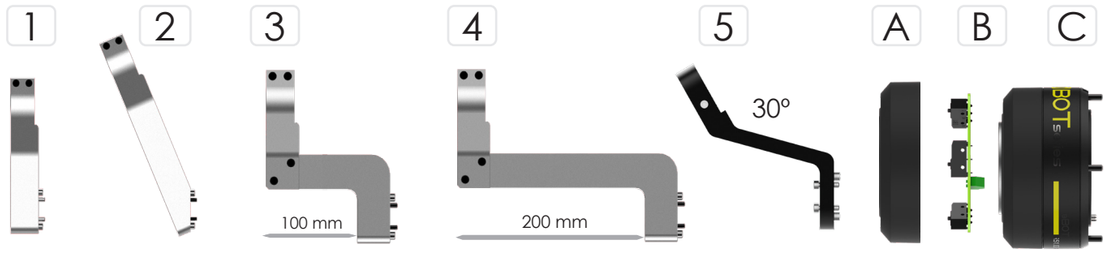

Pos.	CODE	TYPE	Min. Q.
A	R53 0011	Protection cover eBOT	1
B	R50 0014	Anti-collisión sensor BOT	1
C	R53 0001	Anti-collision eBOT medium	1
	R53 0002	Anti-collision eBOT high	1
1	R41 1000	Torch bracket eBOT 90º	1
2	R41 1023	Torch bracket eBOT 67º (standard)	1
3	R41 2100	Torch bracket eBOT 90ºx100mm	bp
4	R41 2200	Torch bracket eBOT 90ºx200mm	bp
5	R41 5001	Bracket TIG T5W 30º	1

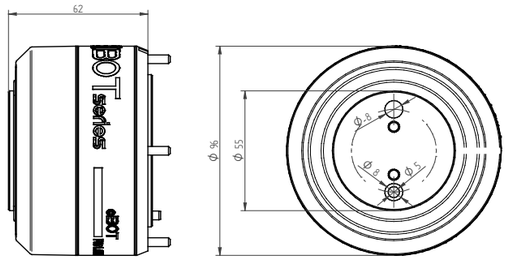

Adapter discs BOT

MIG/MAG, TIG
INDUSTRIAL ROBOTS

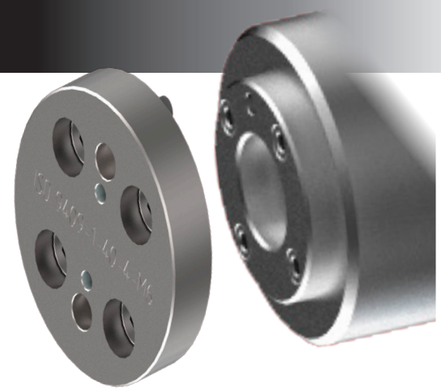

Compatible with BOT systems.

Adaptation to all welding robots.

iBOT - Hollow shaft robots and internal wiring.
eBOT - Standard robots and external wiring
COBOT - use without anti-collision system for collavorative robots

iBOT

A 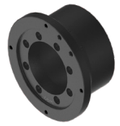 B

Pos.	CODE		ROBOT TYPE	Min. Q.
A	**R71 0060L**	FANUC	ARCMATE 100iC	1
A	**R71 0061L**	FANUC	ARCMATE 100iD	1
A	**R71 0061L**	FANUC	ARCMATE 120iD	1
B	**R71 0090**	ABB	IRB 1600 ID	1
B	**R71 0070**	ABB	IRB 2600 ID	bp
B	**R71 0080**	PANASONIC	AW 1400	bp
C	**R71 0080**	PANASONIC	AW 2000	bp
A	**R71 0040L**	KUKA	KR6 R1820 arc HW	1
A	**R71 0040L**	KUKA	KR8 R1420 arc HW	1
A	**R71 0040L**	KUKA	KR8 R1620 arc HW	1
A	**R71 0040L**	KUKA	KR8 R2100 arc HW	1
B	**R71 0050**	KUKA	KR16 HW	1
A	**R71 0060L**	YASKAWA	MA1440	1
A	**R71 0060L**	YASKAWA	MA2010	1
B	**R71 0010**	YASKAWA	MA1400	1
B	**R71 0010**	YASKAWA	MA1800	1
B	**R71 0010**	YASKAWA	MA1900	1
B	**R71 0010**	KAWASAKI	BA006L	1
A	**R71 0080**	OTC	FD-B4S	bp
A	**R71 0081**	OTC	FD-B6	1
A	**R71 0081**	OTC	FD-B6L	1

eBOT

C

Pos.	CODE		ROBOT TYPE	Min. Q.
C	**R73 0010**	FANUC	ARCMATE 100i	1
C	**R73 0010**	FANUC	ARCMATE 120iL	1
C	**R73 0010**	ABB	IRB 1600	1
C	**R73 0030**	ABB	IRB 2400	1
C	**R73 0030**	ABB	IRB 2600	1
C	**R73 0020**	PANASONIC	AW 8010	bp
C	**R73 0030**	KUKA	KR6	1
C	**R73 0010**	MOTOMAN	UP-6	1
A	**R73 0010**	OTC	FD-V6LS	1
A	**R73 0010**	OTC	FD-V8	1
A	**R73 0010**	OTC	FD-V8L	1

COBOT

D

Pos.	CODE		ROBOT TYPE	Min. Q.
D	**R75 0020**	COBOT	ALL MODELS	1
D	**R75 0021**	COBOT TIG	ALL MODELS - PA6	1

bp: product out of stock, manufacture on demand

Cleaning station CS2

MIG/MAG
INDUSTRIAL ROBOTS

- 6-8 bar * / Min flow 10 l/s
- 6.3 Nm - 425 rpm
- Time cut 0.5 seg
- Max. 1.6 mm (solid wire)
- Max. 3.2 mm (tubular wire)
- 0.5 l spatter
- +5 - +50C°

(*) Oil-free compressed air

Nozzle cleaning station for automated and robotized welding torches. It incorporates welding wire cutting unit. Guarantees continuity of the welding process, keeping the nozzle of the welding torch free of slag and projections

~Cleaning efficiency, short cycle time
~Total elimination of embedded projections
~Includes TCP programming verification point

Pos.	TYPE	CODE	Min. Q.
A	Clean station with wire cut (complete) + base	R02 2001	1

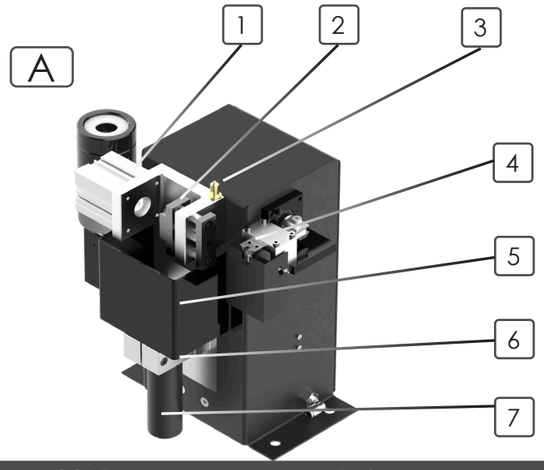

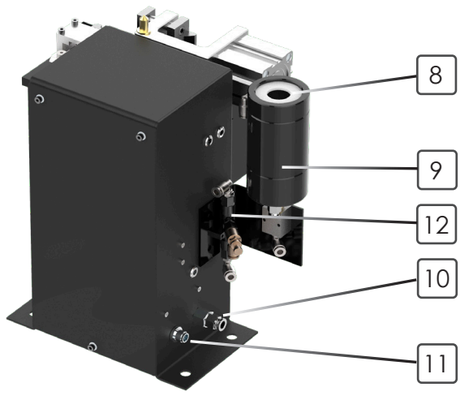

Pos.	CODE	Parts name	Functional descriptions	Min. Q.
1	R02 2P01	Clamping cylinder	Automatic clamping welding nozzle	1
2	R02 2P02	Locater block	Fixing welding gun sprayer nozzle	1
3	R02 2P03	TCP positioning pin	TCP positioning points	1
4	R02 2P04	Wire shearing device	Wiping out needless welding wire	1
5	R02 2P05	Reamer protective cover	Preventing ejection of splash	1
6	R02 2P06	Motor mounting base	Adjusting height of pneumatic motor	1
7	R02 2P07	pneumatic motor	Driving reamer for cleaning	1
8	R02 2P08	Spray protector	Protect losses of liquid spray	1
9	R02 2P09	Anti-sling Unit	Spraying anti-sling agent	1
10	R02 2P10	Air connection port	Connecting 8mm air pipe	1
11	R02 2P11	8-pin Aviation plug	Controlling interface by robot	1
12	R02 2P12	Pheumatic distributor	Liquid control anti spatter	1

Choose your reamer BOT series

BOT 30G / 42G	Nozzle L76xD13mm	Nozzle L76xD15.5mm	Nozzle L79xD15.5mm
	R03 2041	R03 2040	R03 2061
BOT 31EC / 32W	Nozzle L47xD13.5mm		
	R03 2030		
BOT 40W / 52W	Nozzle L76xD13mm	Nozzle L76xD15.5mm	Nozzle L79xD15.5mm
	R03 2041	R03 2040	R03 2042
BOT 41EC	Nozzle L76xD15.5mm		
	R03 2010		
BOT 50W	Nozzle L60xD15.5mm	Nozzle L60xD18mm	
	R03 2040	R03 2050	
BOT 60W	Nozzle L16xD15.5mm	Nozzle L16xD18mm	Nozzle L16xD21mm
	R03 2061	R03 2060	R03 2062

Reamer types for BOT - specific for the BOT series

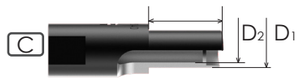

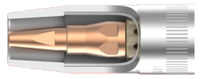

Pos.	CODE	TYPE	Min. Q.
C	R03 2030	Cleaning reamer TH L23xD13xD8.5 mm	1
	R03 2010	Cleaning reamer EC TH L38.5xD15xD10.5 mm	1
	R03 2040	Cleaning reamer TH L26xD15xD10.5 mm	1
	R03 2041	Cleaning reamer TH L22xD12.5xD10.5 mm	1
	R03 2050	Cleaning reamer TH L26xD17.5xD10.5 mm	1
	R03 2060	Cleaning reamer TH L29xD17.5xD10.5 mm	bp

Standard reamer types

Code.	Nozzle inside	Contact tip mm	D1 mm	D2 mm	Min. Q.
R03 1107-40	12	6	11	7	bp
R03 1207-40	13	6	12	7	bp
R03 1209-40	13	8	12	9	bp
R03 1309-40	14	8	13	9	bp
R03 1409-40	15	8	14	9	bp
R03 1509-40	16	8	15	9	bp
R03 1210-40	13	9	12	10	bp
R03 1310-40	14	9	13	10	bp
R03 1410-40	15	9	14	10	bp
R03 1510-40	16	9	15	10	bp
R03 1411-40	15	10	14	11	bp
R03 1511-40	16	10	15	11	bp
R03 1611-40	17	10	16	11	bp
R03 1711-40	18	10	17	11	bp
R03 1713-40	18	12	17	13	bp

bp: product out of stock, manufacture on demand

TCP control neck BOT

MIG/MAG,
Calibrated neck BOT

Max capacity of calibration + -2º

Necks refrigerated liquid and gas

TYPE 1
Cod: R01 1000
Necks 30G, 40W, 41EC, 50W, 60W

TYPE 2
Cod: R01 2000
Necks 31EC, 32W, 50WS

TYPE 3
Cod: R01 3000
Necks XXL

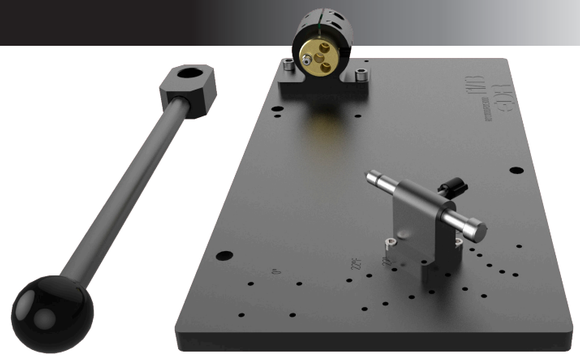

The Calibration table for MIG / MAG welding necks of the BOT series, allows for precise adjustment and calibration of the robotic necks, can for readjusting the neck after a blow or to verify its status after intensive use

1.1 Type 1

1.2 Type 2

1.3 Type 3

2

4.1

3.1

4.2

3.2

4.3

3.3

3.4

Pos.	CODE	TYPE	Min. Q.
1.1	R01 1000	TCP control type 1	1
1.2	R01 2000	TCP control type 2	bp
1.3	R01 3000	TCP control type 3	bp
2	R01 0008	Correction lever	1
3.1	R02 0004	Check tool 31EC/32W (M6)	1
3.2	R02 0001	Check tool 30G/40W/41EC	1
3.3	R02 0005	Check tool 50W	1
3.4	R02 0006	Check tool 60W	1
4.1	R10 0312	Tip TCP M6-12mm-31EC-32W	1
4.2	R10 0215	Tip TCP EC M8-15mm-41EC	1
4.3	R10 0115	Tip TCP M10-15mm-30G-40W-50W-60W	1

bp: product out of stock, manufacture on demand

Protective liquids

Protective liquids are an effective way to increase the life of your systems. protect your torch from electrolysis with CLEAR PROTECT and keep your torch free of spatter with SPATTER FREE.

1.1

1.2

Pos.	CODE	TYPE	Min. Q.
1.1	R07 1005	Anti-projection liquid SPATTER FREE 5 (5l)	1
2.2	R07 0005	Coolant CLEAR PROTECT 10 (10l)	1

DATA

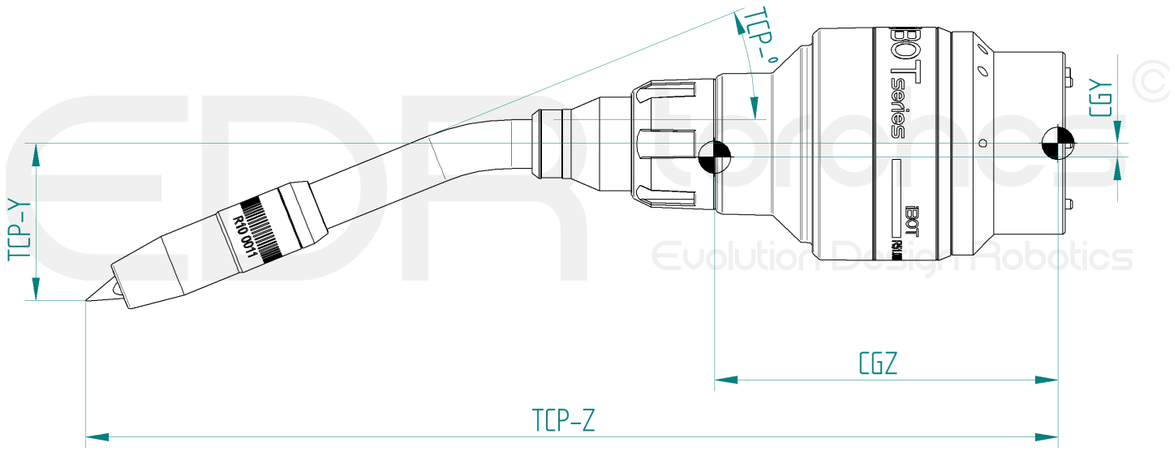

Pos.	NECK TYPE	CODE	TCP-Y	TCP-Z	TCP-°	CG-Y	CG-Z	KG
40W	Torch neck BOT-40W 0° (X=0 mm, Z=259 mm)	R14 0000						2.35
	Torch neck BOT-40W 22° (X=64 mm, Z=247 mm)	R14 0220	-65	401	22°	-4	107	2.35
	Torch neck BOT-40W 22°F (X=50 mm, Z=250 mm	R14 0222	-50	404	22°	-2	105	2.35
	Torch neck BOT-40W 22°L (X=64 mm, Z=297 mm)	R14 0221	-65	451	22°	-4	116	2.50
	Torch neck BOT-40W 22°LF (X=50 mm, Z=300 mm)	R14 0223	-50	454	22°	-3	151	2.50
	Torch neck BOT-40W 36° (X=96 mm, Z=230 mm)	R14 0360	-96	384	36°	-6	105	2.35
	Torch neck BOT-40W 45° (X=111 mm, Z=217 mm)	R14 0450	-111	371	45°	-6	103	2.35
	Torch neck BOT-40W 45°L (X=111 mm, Z=267 mm)	R14 0451	-111	421	45°			2.50

EDR torches® Evolution Design Robotics

New installation data
Datos nueva instalación
Date de naissance instalación
EDR-RV-20

Customer/Cliente/Client: | Date:

[redacted]

Connection type:
Tipo y conexión:
Type de connexion:
○ Euro ○ Miller ○ Panasonic

Type of refrigeration:
Tipo de refrigeración:
Type de réfrigération:
○ Líquido ○ Gas

Intensities of use:
Intensidades de uso:
Intensités d'utilisation:
○ 200A ○ 300A ○ 400A

Diameter / type of wire to be used:
Diametro/tipo de hilo a usar:
Diamètre / type de fil à utiliser:
○ 1.2 ○ 1.6 ○ Al

Neck angle:
Angulo del cuello:
Angle du cou:
○ 22° ○ 36° ○ 45°

Neck length:
Longitud del cuello:
Longueur du cou:
○ N ○ L ○ XL

Power cable length (EDR calculation data):
Longitud del cable de potencia (Dato calculado por EDR):
Longueur du câble d'alimentation (calculé par EDR): mm.

Long -A- IBOT: cm

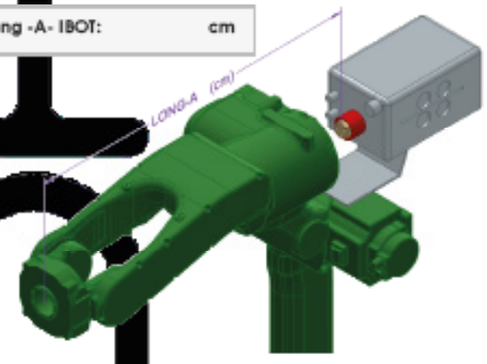

Long -A- eBOT: cm

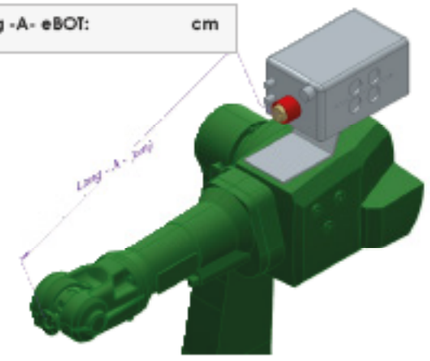

Only for Retrofit installations, TCP value/ Solo para instalaciones de Retrofit, valor del TCP/ Seulement pour les installations Retrofit, valeur TCP:

X mm:
Z mm:
A°:

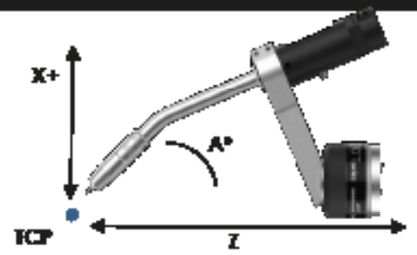

Attach photo of installation and model of the torch to be replaced if possible.
Adjunta foto de instalación y modelo de la antorcha a sustituir si es posible.
Joindre une photo de l'installation et du modèle de la torche à remplacer si possible.

Robotic welding torches

EDRtorches, S.L.
www.edrtorches.com
info@edrtorches.com

© 2026 EDRtorches, S.L. All rights reserved. Subject to change without notice. Excerpts and reprints not permitted